User Manual

Supmea

Electromagnetic flow/BTU meter

Supmea

Headquarters
5th floor,Building 4,Singapore Hangzhou Science Technology Park,No. 6 street,
Hangzhou Economic Development Area,Hangzhou 310018,China

Singapore
2 Venture Drive #11-30 Vision Exchange Singapore

info@supmea.com
www.supmea.com

Supmea Automation Co.,Ltd.

U-LDG/LDGC/LDGR-SUP-EN4

Preface

Thank you for purchasing electromagnetic flow meter. Please read this manual carefully before operating and using it correctly to avoid unnecessary losses caused by false operation.

Note

- Modification of this manual's contents will not be notified as a result of some factors, such as function upgrading.
- We try our best to guarantee that the manual content is accurate, if you find something wrong or incorrect, please contact us.
- This product is forbidden to use in explosion-proof occasions.

Version

U-LDG/LDGC/LDGR-SUP-EN4

Contents

Chapter 1 Safety instructions 1
1.1. Manufacturer's safety Instructions 1
1.2. Safety instructions for operators 3
1.3. Warranty & After-sales Service 3
Chapter 2 Introduction 4
2.1. Scope of delivery 4
2.2. Measuring principle 6
2.3. Mechanical Construction 8
2.4. Application introduction 9
2.5. Wiring introduction 10
2.6. Notice 12
2.7. Nameplate 13
Chapter 3 Installation 14
3.1. Installation tips 14
3.2. Storage 14
3.3. Pipeline design 14
3.4. Pipe design 14
3.5. Installation conditions 17
3.6. Mechanical installation 21
3.7 BTU meter installation requirements 24
3.7. Dimensions for electromagnetic flowmeter 26
3.8. Converter dimensions 27
Chapter 4 Electrical connection 28
4.1. Safety tips 28
4.2. Connect signal and magnetic field current cable 28
4.3. Potential Equalization 29
4.4. Power supply 30
4.5. Input termination 31
4.6. Output termination 32

Chapter 5 Start up 35
5.1. Power on 35
5.2. Converter start up 35
Chapter 6 Operation 36
6.1. Display and operating elements 36
6.2. Display (operation mode) 38
6.3. Display button operation instructions 39
6.4. Quick setup menu 39
6.5. Configuration details 40
6.6. Brief operating instruction and function 53
Chapter 7 Display Functions 59
7.1. System Information 59
7.2. Pulse/Frequency/Current Output 64
7.3. Communication 65
Chapter 8 Technical Parameters 76
8.1. Technical Parameters 76
8.2. Electrode selection and specification 79
8.3. Flowmeter 81
8.4. Flow and Velocity Parallel Table for Electromagnetic Flowmeter 82
8.5. Accuracy 83
Chapter 9 Plug-in type electromagnetic flowmeter series 84
9.1. The functional use and scope of application of the product 84
9.2. Product form and composition 85
9.3. Main technical specification 85
9.4. Structure 86
9.5. Installation and use 87
9.6. Maintenance, Repair and Common Troubleshooting 90

Chapter 1 Safety instructions

1.1. Manufacturer's safety Instructions

1.1.1. Copyright and data protection

The content of this document has been checked carefully, but we do not guarantee that the contents are totally accurate and it is in accordance with the latest version. The contents and works of this document are under China's copyright protection. Any copy, processing and transmission of it out of the scope of copyright, in any forms, must get the written permission of the authors or the manufacturer. Manufacturers always try to respect the copyrights of others, and try to use their own works or works without authorization.

Personal data (such as name, address or E-mail address) used in manufacturer's documents, if possible, are conducted on a voluntary basis. Use of products and services, if possible, starts without having to provide personnel data. We remind you: data transmission on the Internet (such as communicating via email) may possibly meet security vulnerabilities. We can't give security guarantee that data will definitely not be obtained by a third party. Here, we are clearly against the third party using contact data, within the scope of copyright notice obligation, to send advertising materials without any requirement.

1.1.2. Exemption clause

The manufacturer will not bear the responsibility for any forms of loss caused by using the product; these consequences include direct, indirect or accidental losses as well as these coming from punishment, but not limited to these consequences. If the manufacturer has intentional behavior or gross negligence, the disclaimer is invalid. If it is not allowed to limit the product's self assurance, nor is it allowed to waive or limit certain types of compensation, and these rights are suited for you as well according to applicable laws, in this case the above disclaimer or limitations may partially or completely not apply to you.

For every purchase of products, they are applicable to product documentation and manufacturer's sale terms.

As for document contents including this disclaimer, the manufacturer reserves and has the right to modify at any time in any way for any reason without any notice in

advance, and it will not bear the responsibility for the consequences coming out of any forms of change.

1.1.3. Product liability and warranty

The operator judges whether the flow meter serves the purpose, and bear the responsibility for it. The manufacturer does not assume the consequences caused by operator’s misuse of meter. Wrong installation and operation of flowmeter (system) will lead to deprive of warranty rights. In addition, the corresponding ’standard sales terms’ applies as well, and the clause is the basis of purchase contract.

1.1.4. Document details

In order to avoid harm or damage to the equipment when used improperly, please make sure reading the information in this document before using it. In addition, you must comply with national standards, safety regulations and accident prevention rules.

If you can't understand this document, please ask the manufacturer for help. The manufacturer will not take the responsibility for property loss or physical injuries due to misunderstanding of the information contained in the document.

This document will help you to establish favorable operating conditions so as to make sure that you use the equipment in a safe and effective way. In addition, something of particular attention and safety measures in the document are marked by the following marks.

1.1.5. Display convention

The following symbols will make it easier for you to use this document.



Danger!

This symbol signifies related and important safety tips.



Warning!

Such warnings must be paid attention to. Slight negligence may lead to serious health threat, and may damage the equipment itself or the operating factory facilities.



Note!

Such warnings must be paid attention to. Any slight negligence

may also lead to functional fault of the equipment itself.

1.2. Safety instructions for operators



Warning!

Only corresponding personnel who got trained and authorized is allowed to install, use, operate and maintain the equipment. This document will help you to establish favorable operating conditions so as to make sure that you use the equipment in a safe and effective way.

1.3. Warranty & After-sales Service

We promise to the customer that the hardware accessories provided during the supply of the instrument have no defects in material and manufacturing process. From the date of the purchase, if the user's notice of such defects is received during the warranty period, the company will unconditionally maintain or replace the defective products without charge, and all non customized products are guaranteed to be returned and replaced within 7 days.

Disclaimers:

- During the warranty period, product faults caused by the following reasons are not in the scope of Three Guarantees service
- Product faults caused by improper use by customers.
- Product faults caused by disassembling, repairing and refitting the product.

After-sales service commitment:

- We promise to deal with the customer's technical questions within 2 hours.
- For the instruments returned to the factory for maintenance, we promise to issue the test results within 3 working days and the maintenance results within 7 working days after receiving them

Chapter 2 Introduction

2.1. Scope of delivery

Tips!

Please check whether the boxes are damaged or not, and whether they have been handled roughly or not. Please report the damage to the deliverer and the manufacturer.

Note!

Please check the packing list to make sure that all the goods you received are integrated.

Note!

Please check the nameplate of the equipment, and confirm whether the delivered contents are consistent with the order, and check whether the voltage indicated on the nameplate is correct. Otherwise, please contact manufacturer or supplier.

(1) Remote type flowmeter

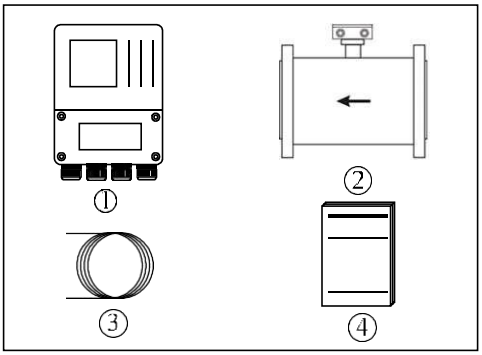

Figure 1

① Remote type flowmeter signal converter
② Remote type electromagnetic flowmeter sensor
③ Signal cable
④ User manual

(2) Compact type flowmeter (DN65, refer to type selection manual for specific parameters)

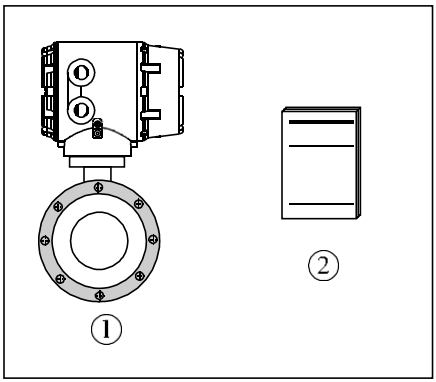

Figure 2

① Compact type electromagnetic flowmeter
② User manual

2.2. Measuring principle

2.2.1. Electromagnetic flowmeter measuring principle

The operating principle of electromagnetic flowmeter is based on Faraday's law of electromagnetic induction. The two electromagnetic coils at the upper and lower ends as shown in Figure 3 generate a constant or alternating magnetic field. When the conductive medium flows through the electromagnetic flowmeter, the induced electromotive force can be detected between the left and right electrodes on the wall of the flowmeter tube. The magnitude of the induced electromotive force is proportional to the electrically conductive medium flow rate, the magnetic induction density of the magnetic field, and the width of the conductor (the inner diameter of the flowmeter measuring tube), and the flow rate of the medium can be obtained by calculation. The induced electromotive force equation is as follows:

$$E=K\times B\times V\times D$$

Where: E—Induced electromotive force

K—Meter constant

B—Magnetic induction density

V—Average flow speed in cross-section of measuring tube

D—Inner diameter of measuring tube

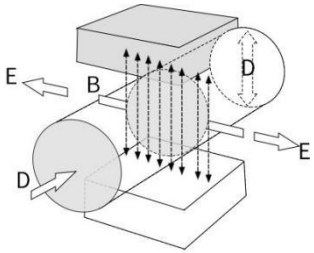

Figure 3

When measuring the flow, the fluid flows through a magnetic field which is perpendicular to the flow direction. The flow of conductive fluid induces a potential proportional to the average flow velocity, thus requiring the conductivity of the measured flowing liquid to be higher than the minimum conductivity (5us/cm).

The induced voltage signal is detected by two electrodes and transmitted to the converter via a cable. After a series of analog and digital signal processing, the accumulated flow and real-time flow are displayed on the display of the converter.

2.2.2. BTU meter measuring principle

The working principle of the electromagnetic heat meter: the hot water (cold water) supplied by the heat source flows into the heat exchange system at a higher (low) temperature and flows out at a lower (higher) temperature. release or absorb heat. When the water flows through the heat exchange system, according to the flow rate given by the flow sensor and the temperature of the supply and return water given by the paired temperature sensor, as well as the elapsed time of the water flow, the calculator calculates and displays the heat released or absorbed by the system.

$$Q = \int_{\tau_0}^{\tau_1} q_m \times \Delta h \times d\tau = \int_{\tau_0}^{\tau_1} \rho \times q_v \times \Delta h \times d\tau$$

Q: Heat released or absorbed by the system, J or kWh;

q_m: Mass flow of water flowing through the BTU meter, kg/h;

q_v: Volume flow of water flowing through the BTU meter, m3/h;

ρ: Density of water flowing through the BTU meter, kg/m3;

Δh: The enthalpy difference of water at the inlet and outlet temperatures of the heat exchange system, J/kg;

τ: Time，h。

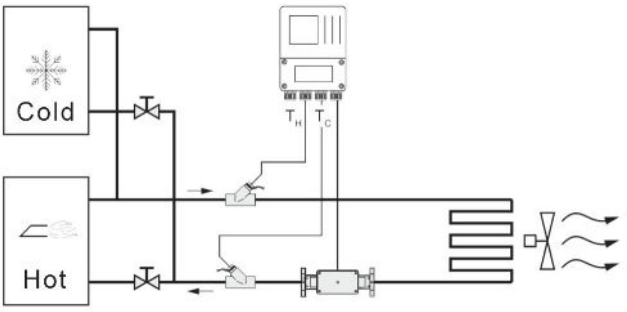

Figure 4

2.3. Mechanical Construction

The electromagnetic flowmeter is mainly consisted of the following parts, see Figure 5.

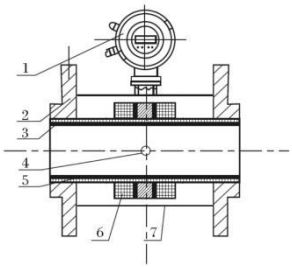

1-Converter; 2-Flange;
3-Insulation lining; 4-Electrode;
5-Measuring tube; 6-Excitation coil;
7-Casing

Figure 5

The electromagnetic flowmeter mainly consists of a sensor and a converter. The sensor includes a flange, a lining, an electrode, a measuring tube, an excitation coil, and a sensor casing, etc; the converter includes an internal circuit board and a converter casing.

(1) Converter: Provide stable excitation current for the sensor, meanwhile amplify the induced electromotive force obtained by the sensor and convert it to standard electrical signals or frequency signals; at the same time, it displays real-time flow and parameters for displaying, controlling and adjusting thereof.

(2) Flange: for connecting process piping.

(3) Lining: Refer to a complete layer of electrically insulating corrosion resistant material located at the inner side of measuring tube and flange sealing surface.

(4) Electrode: A pair of electrodes is installed on the wall of the measuring tube which is perpendicular to the magnetic line to detect the flow signal. The material of electrode can be selected according to the corrosion performance of the measured medium. It is also equipped with 1-2 grounding electrodes for grounding and anti-interference of flow signal measurement.

(5) Measuring tube: The measured medium flows through the measuring tube.

It is made by welding non-magnetic stainless steel and flange, and the inner side is equipped with insulation lining.

(6) Excitation coil: A group of coils is arranged on the upper and lower side of external side of the measuring tube respectively to generate a working magnetic field.

(7) Casing: Protect and seal the meter.

2.4. Application introduction

Electromagnetic flowmeter applies only to measure the real-time flow rate of an electrically conductive liquid or liquid-solid two-phase flow, and has a flow accumulation function. Theoretically, an ordinary type electromagnetic flowmeter can measure the medium conductivity of not less than 5μS/cm, but it's proved that the measured conductivity by the ordinary electromagnetic flowmeter is higher than one to two orders of magnitude, at least more than 30μS/cm.Meanwhile,the conductivity measured online must prevail, for that measured offline may be relatively higher due to carbon dioxide and nitrogen dioxide contained in the air may dissolve into the medium.

2.5. Wiring introduction

(1) **Remote type**

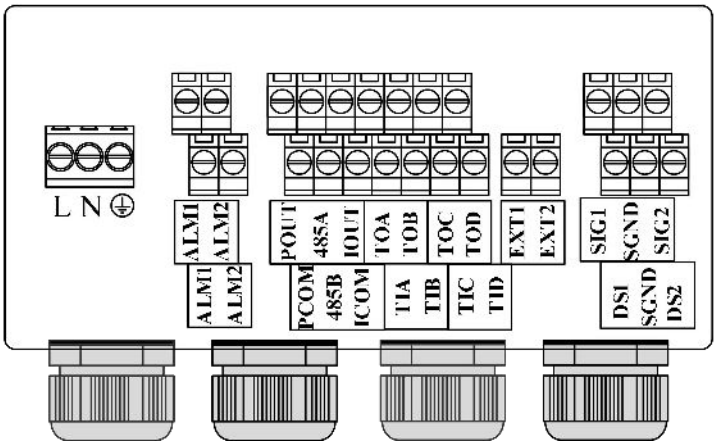

Figure 6

L, N:	100-240VAC power supply
⏚ :	Ground
ALM1，ALM2:	Relay out
POUT，PCOM:	Pulse/Frequency output
485A，485B:	RS485 communication
IOUT，ICOM:	4-20mA output
TIA, TIB, TIC, TID:	Water supply temperature (Pt1000)
TOA, TOB, TOC, TOD:	Return water temperature (Pt1000)
EXT1，EXT2:	Excitation signal
SIG1，SIG2，SGND:	Electrode signal
DS1，DS2:	Electrode shield

(2) Compact type

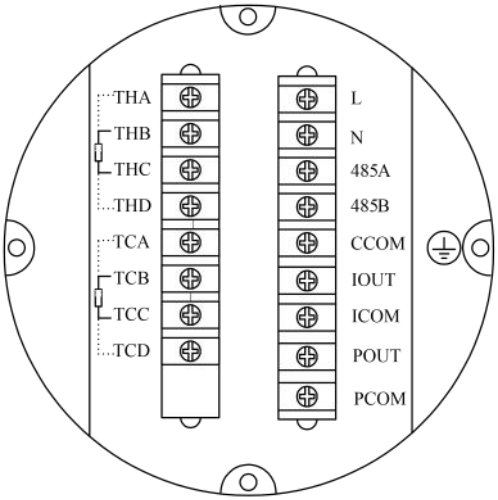

Figure 7

L, N:	100-240VAC power supply
485A，485B:	RS485 communication
IOUT，ICOM:	4-20mA output connection
POUT，PCOM:	Pulse/Frequency/Relay out
THA, THB, THC, THD:	Water supply temperature (Pt1000)
TCA, TCB, TCC, TCD:	Return water temperature (Pt1000)
CCOM:	RS485 communication ground
⏚ :	Converter instrument grounding protection

(Note: the left terminal is the BTU meter terminal)

2.6. Notice

If pulse output signal is used, it is recommended to use pull-up resistor when wiring.

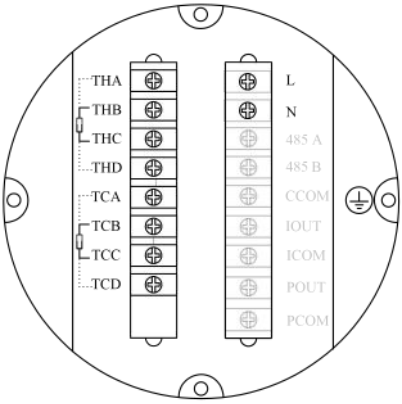

Figure 8

The corresponding terminals are POUT, PCOM

POUT is the pulse signal, PCOM is the signal ground

Note: The left terminal is the BTU meter terminal

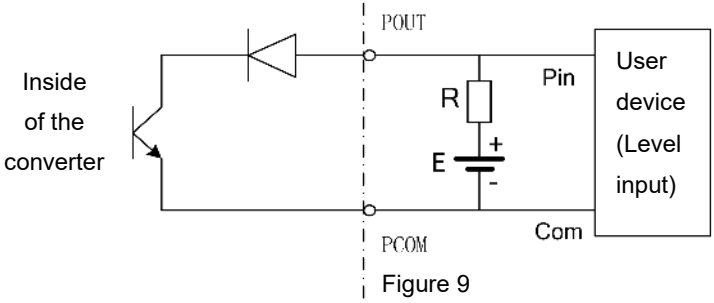

Figure 9

Recommendation: The pull-up resistor R in the figure is recommended to use a 2K, 0.5W resistor, and the power supply E is recommended to use 24V DC.

2.7. Nameplate

Note!

Please check the nameplate of the equipment and confirm whether the delivered contents are consistent with your order.

The ex-factory parameters of the meter are preset according to the requirements of the order, thus users are not required to set the parameters prior to operation. Instead, you need to check whether the parameters indicated on the nameplate are correctly preset against with the actual working conditions.

The following are parameters on the nameplate.



Figure 10

Warning: it is strictly prohibited to open the housing, without first switching off the power supply.

Chapter 3 Installation

3.1. Installation tips



Note!

Please check whether the boxes are damaged or not, and whether they have been handled roughly or not. Please report the damage to the courier service and the manufacturer.



Note!

Please check the packing list to make sure the batch of goods that you have received is complete.



Note!

Please check the instrument nameplate, and confirm whether the delivered contents are consistent with your order. Check whether the power supply indicated on the nameplate is correct. If not correct, please contact the manufacturer.

3.2. Storage

(1) The instrument shall be stored in a dry and clean place.

(2) Avoid exposure in direct sunlight for long.

(3) Instrument shall be stored in the original package.

3.3. Pipeline design

The following items shall be considered when the pipes are designed.

(1) Leave enough space on the side.

(2) Do not make the electromagnetic flowmeter subject to violent vibration.

3.4. Pipe design

(1) Location

① The electromagnetic flowmeter shall be installed in a dry and ventilated place. Places that could be flooded should be avoided.

② The electromagnetic flowmeter shall avoid the sunshine and rain. When it is installed outdoors, it shall be equipped with facilities against sunshine and rain. The ambient temperature ranges from -20°C to +60°C.

③ The electromagnetic flowmeter shall not be installed in places with large temperature variation and avoid high temperature radiation from the equipment. If it must be installed therein, heat insulation and ventilation measures shall be taken.

④ The electromagnetic flowmeter shall avoid installing in an environment containing corrosive gases. If it must be installed therein, ventilation and anti-corrosion measures shall be taken.

⑤ The electromagnetic flowmeter shall be installed avoiding strong vibration as possible, such as violent pipe vibration. In this case, brackets for fixing pipes on both sides of electromagnetic flowmeter shall be provided.

⑥ Part of the sensor of electromagnetic flowmeters with IP68 (3 m under water) protection level can be placed into the water. While the electromagnetic flowmeter with IP65 protection level cannot be immersed into the water or installed outdoors.

(2) Avoid interference of magnetic field

Do not install electromagnetic flowmeters near motors, transformers, or other power sources which are prone to cause electromagnetic interference, near the frequency converter or obtain power from the power distribution cabinet of the frequency converter to avoid interference.

(3) The distance of the straight pipe

In order to ensure the measurement accuracy of flowmeter, it is recommended to ensure that the length of the straight pipe on the upstream of the sensor shall be at least 10 times of pipe diameters (10D), and the length of straight pipe on the downstream be at least 5 times of pipe diameters (5D)

(4) Maintenance space

For the convenience of installation and maintenance, enough installation space shall be reserved around the electromagnetic flowmeter.

(5) For pipes that do not allow flow disruption in the process

When installing the electromagnetic flowmeter, bypass pipes and cleaning ports shall be added. As shown in Figure 11, these devices can ensure the continuous operation of equipment system when the flowmeter is out of service.

(6) Support of electromagnetic flowmeter

Do not install the electromagnetic flowmeter on a free-vibrating pipe without any support. Instead, a mounting base shall be used to secure the measuring tube. When the electromagnetic flowmeter is required to be installed underground, the pipes at both inlet and outlet ends shall be provided with support items, and a metal protection plate shall be installed above the flowmeter.

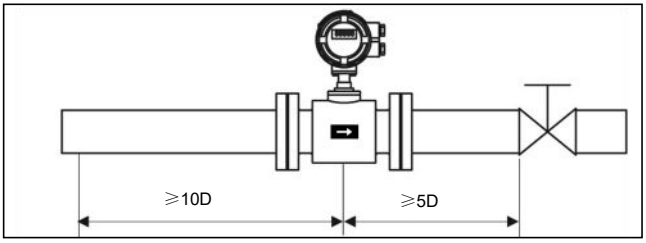

Figure 11

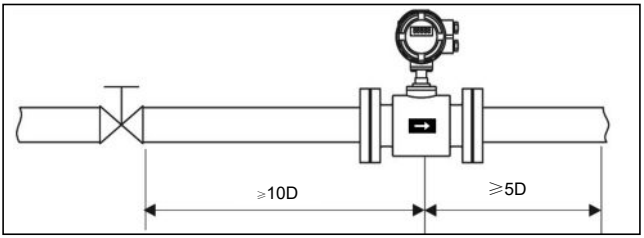

Figure 12

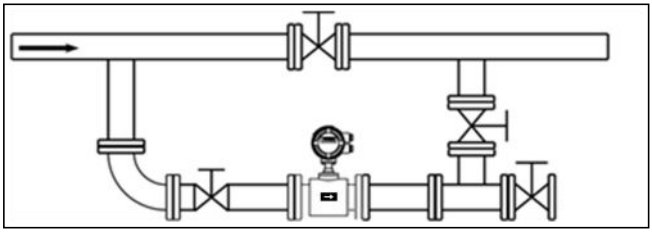

Figure 13

3.5. Installation conditions

(1) Flow direction

The flowmeter can be set to automatically detect the positive and negative flow direction. The flow direction arrow on the sensor casing indicates the positive flow direction specified by the manufacturer. Generally, when installing the meter, the user shall make the flow arrow consistent with the on-site process flow.

Figure 14 shows the preferred location for installing the electromagnetic flowmeter.

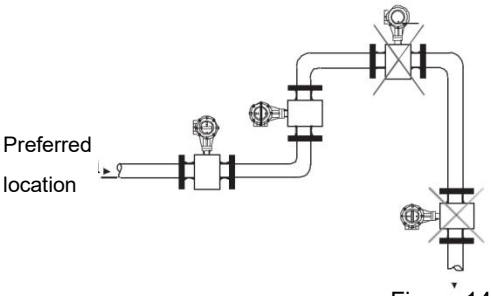

The pipe is routed to the highest point (Bubble accumulation in the measuring tube is likely to cause produce measurement errors!) Make sure the pipeline is always full.

Figure 14

(2) Installation direction of electromagnetic flowmeter and sensor electrodes

The sensor allows horizontal and vertical installation. When it's installed horizontally, the electrode shall be horizontally placed such that bubbles will not be adsorbed near the electrode in case that the medium is contained with bubbles or precipitates. Otherwise, this would cause converter signals opened and zero drift due to the fact that deposits are not covered by the electrode.

(3) Liquids shall always be filled with pipes.

Pipes shall be arranged to ensure that the electromagnetic flowmeter measuring tube is always filled with liquids.

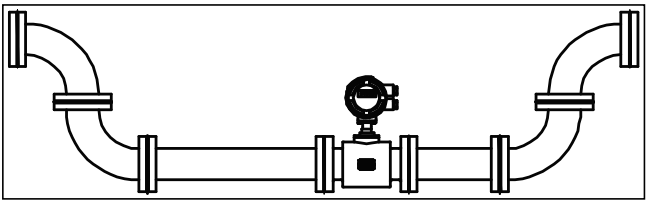

Figure 15

In case of liquids or suspensions containing solid particles, it is recommended to install electromagnetic flowmeters vertically. For one thing, the phase separation of measured medium can be prevented; for another, the sensor lining is worn evenly. In addition, impurities will not precipitate at the bottom of the measuring tube.
It shall be guaranteed that liquids flow from bottom to top to ensure that the sensor measuring tube is always filled with medium.

(4) The electromagnetic flowmeter cannot be installed on the suction side of the pump.

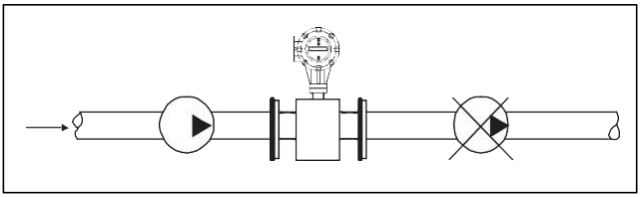

Figure 16

(5) For long pipelines, control valves are generally installed on the downstream of the electromagnetic flowmeter.

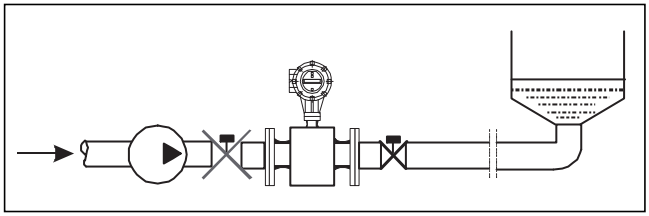

Figure 17

(6) For pipes with open discharges, the electromagnetic flowmeter shall be installed at the bottom section (lower part of the pipe).

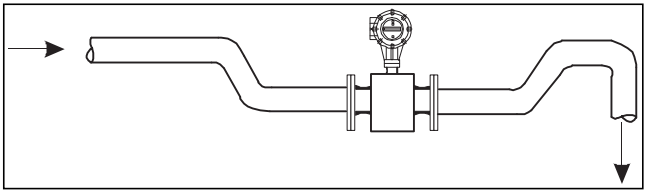

Figure 18

(7) For places where fall head of pipes is over 5 m, the air valve shall be installed on the downstream of the electromagnetic flowmeter.

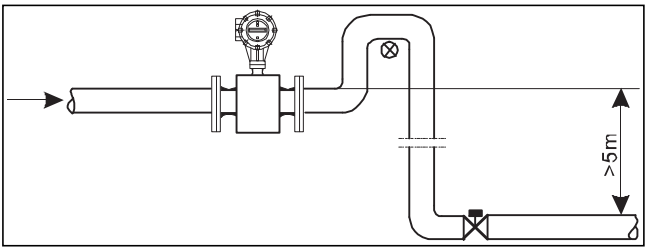

Figure 19

(8) Measurement errors caused by the ingress of foreign gas and damage to the lining caused by vacuum should be avoided.

(9) No bubbles shall be observed in the pipes.

Pipes shall be designed to prevent the air bubbles in the fluids from accumulating the measurement pipe of a sensor. If a valve exists near the flowmeter, try to mount the flowmeter on the valve's upstream side for preventing a decrease of pressure inside the pipe possibly, consequently avoiding the possibility of air bubbles.

ensure that no gas can be separated from the liquid.

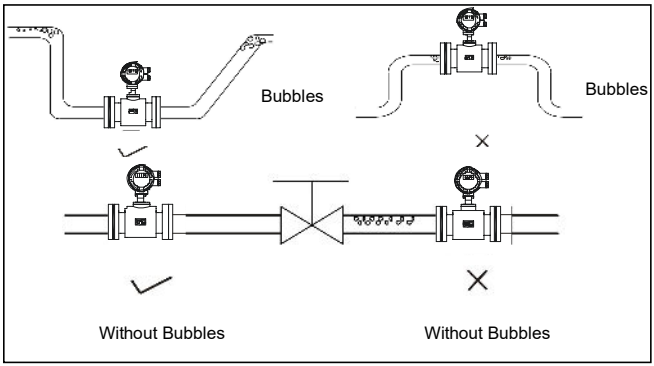

Figure 20

(10) Liquid conductivity

It's not allowed to install the electromagnetic flowmeter at a place where the liquid conductivity is extremely uneven. Injection of chemicals from the upstream of the meter can easily result in uneven liquid conductivity, which can cause serious

interference to the meter flow indication. In this case, it is recommended to inject chemicals from the downstream of the meter; if chemicals must be injected from the upstream of the meter, it must be ensured that the straight pipe section on the upstream at least has 30 times of pipe diameters to ensure adequate mixing of liquids.

(11) Grounding

As the voltage of induced signal of electromagnetic flowmeter is small, it's more prone to be affected by noises or other electromagnetic signals. This is why the electromagnetic flowmeter needs to be grounded in many occasions. This functions to form an internal space for shielding external interference through the grounding of flowmeter casing, thereby improving measurement accuracy.

3.6. Mechanical installation

3.6.1. Installation of flowmeter pipeline

(1) Prior to installation, the pipeline shall be calibrated to ensure that the diameter of the meter has good coaxiality with the user's pipeline. For sensors with a nominal diameter of no more than 50mm, the protrusion of its axis shall not exceed 1.5 mm; for sensors with a nominal diameter of 65~300 mm, it shall not exceed 2mm and for sensors with a nominal diameter of no less than 350 mm, it shall not exceed 4 mm.

(2) In general, foreign particles (such as welding slag) may exist in newly installed pipelines. Before the flowmeter is installed, wash away the debris. It not only prevents the lining from being damaged but also measurement error caused by foreign particles which pass through the measuring tube during measurement.

3.6.2. Precautions

Operating introduction:

(1) Take care to avoid damage to the meter when you are unpacking. It is suggested not to unpack the box before transporting it to the installation site to avoid damage of meter. It's prohibited to use a stick or rope to lead through the measuring tube of sensor. Instead, follow the correct lifting as shown in the figure below.

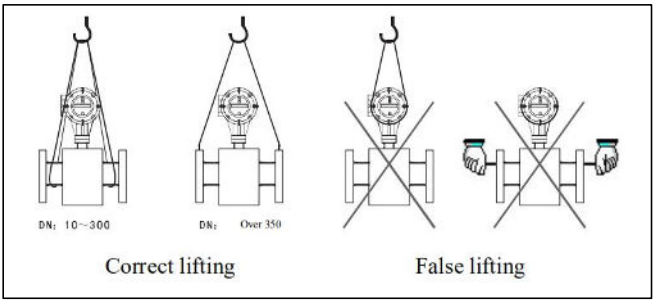

Figure 21

(2) Avoid vibration

Avoid heavy falling or pressing, especially the flange surface which cannot be stressed (otherwise, the lining may be damaged to disable operation of the meter).

(3) Protection of flange surface

After unpacking, pay attention to protect the flange. Do not place it on the unpadded floor or other uneven boards.

(4) Terminal box

It's not allowed to seal the terminal box cover before electrical wiring. After the wiring is completed, please apply the special sealant provided by our company to on the terminal box as soon as possible. Then cover terminal box and tighten the screws to ensure the tightness.

If the protection level of the electromagnetic flowmeter is IP68 at type selection, it has been subject to water-proof sealing.

(5) No operation for long duration

After the instrument is installed, it shall be avoided that the meter is not checked for long duration. If yes, please take the following measures:

A. Check the tightness of the covers and the wiring terminals to ensure that no moisture and water enters into the meter.

B. Conduct regular inspection. Check against the measures mentioned above and the terminal box for at least once a year. In the event of water entry into the meter (eg, after heavy rain, etc.), the meter shall be inspected

immediately.Installation of flowmeter

3.6.3. Installation of flowmeter

(1) Installation direction

The flow direction of the measured fluid shall be consistent with flow direction mark indicated on the flowmeter.

(2) Seal gaskets installed between flanges shall have good corrosion resistance and shall not protrude into the interior of the pipe.

(3) When welding or flame cutting is performed adjacent to sensor pipe, isolation measures shall be taken to prevent the lining from being deformed due to heat.

(4) If it is installed in a well or immersed in water, apply sealant on the terminal box of the sensor after the system is installed and debugged. (If the protection level of the electromagnetic flowmeter is IP68 at type selection, it has been subject to water-proof sealing.)

(5) When the flowmeter is installed on the field, use bolts to connect the flange on the sensor to that on the pipe. Bolts, nuts and their threads for securing meters shall be complete and free of damage and well lubricated. Use them with suitable flat washers and spring washer. A torque wrench shall be used to tighten the bolts according to the flange size and torque. Regularly tighten the bolts during daily use to prevent looseness of the bolts.

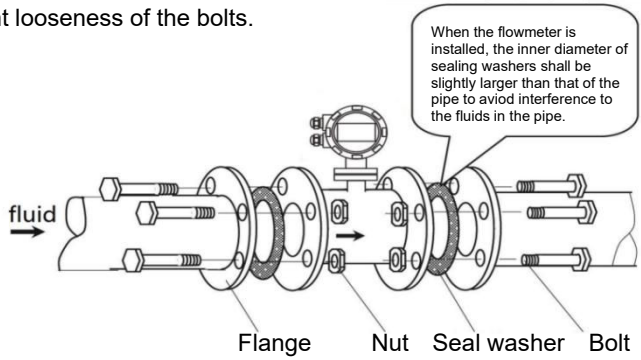

Figure 22

3.7 BTU meter installation requirements

(1) The pipes must be cleaned before the instrument is installed;

(2) The BTU meter is a precision instrument. Care must be taken during installation. It is forbidden to lift the meter head and sensor wire; it is forbidden to squeeze the temperature sensor to prevent damage to the instrument;

(3) The direction of the arrow on the body of the BTU meter sensor indicates the direction of water flow, and in theory, it is not allowed to install it backwards;

(4) The front end of the BTU meter pipe must be equipped with a filter of the corresponding diameter;

(5) When installing the BTU meter flow sensor, ensure that there is at least a 10DN straight pipe section upstream of the water flow direction of the heat meter pipe, and at least a 5DN straight pipe section downstream;

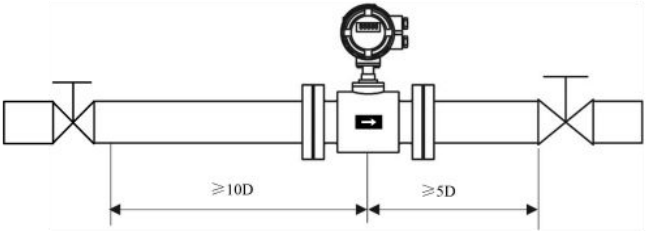

Figure 23

(6) Valves with corresponding diameters must be installed at both ends of the BTU meter, and they can be separated from the BTU meter for cleaning and maintenance of the BTU meter during use;

(7) The BTU meter has a pair of temperature sensors, which are used at the water inlet and outlet respectively. When installing, install the temperature sensor with the red label on the water inlet pipe, and install the temperature sensor with the blue label on the water outlet pipe. The position where the temperature sensor probe is inserted into the pipeline should be in the center of the pipeline section (there are three ways to insert the temperature sensor as shown in the figure below: 1 represents the temperature sensor sheath, 2 represents the pipeline opening, 3 represents the pipeline section, and 4 represents the temperature sensor probe)

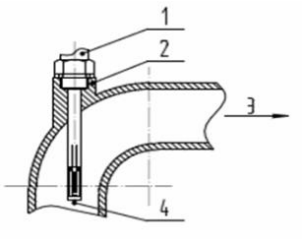

Figure 24 Insertion of elbow Pipes

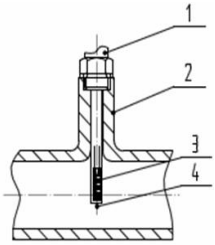

Figure 25 Insertion of straight pipes

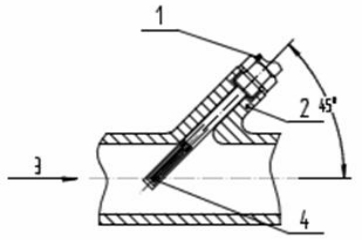

Figure 26 Insertion of sloped pipes

(8) The standard wire length of the temperature sensor is 3 meters. If there are special circumstances during installation, it can be lengthened according to the actual length. The situation should be explained to the manufacturer when ordering. Do not increase or decrease the lead length of the temperature sensor at will;
(9) After the installation of the heat meter is completed, seal each connection, especially where the sensor is inserted into the pipe.

3.7. Dimensions for electromagnetic flowmeter

Table 1

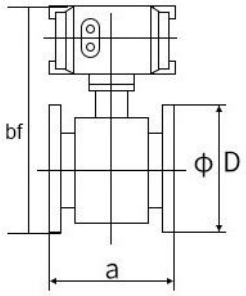

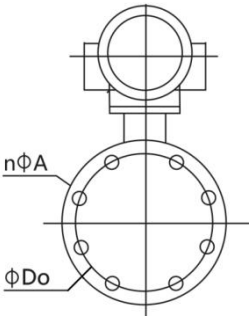

DN	a	bf	D	Do	n*A	Pressure resistance
15	200	326	95	65	4*14	1.6 MPa
20	200	326	105	75	4*14	
25	200	316	115	85	4*14	
32	200	331	135	100	4*18	
40	200	339	145	110	4*18	
50	200	358	160	125	4*18	
65	200	370	180	145	4*18	
80	200	389	195	160	8*18	
100	250	410	215	180	8*18	
125	250	440	245	210	8*18	
150	300	469	280	240	8*23	
200	350	522	335	295	12*23	
250	450	824	405	355	12*25	
300	500	624	440	400	12*23	1 MPa
350	550	1029	500	460	16*23	
400	600	737	565	515	16*25	
450	600	786	615	565	20*25	
500	600	839	670	620	20*25	
600	600	944	780	725	20*30	
700	700	1052	895	840	24*30	
800	800	1164	1015	950	24*33	
900	900	1264	1115	1050	28*33	
1000	1000	1374	1230	1160	28*36	
1200	1200	1589	1405	1340	32*33	0.6 MPa

3.8. Converter dimensions

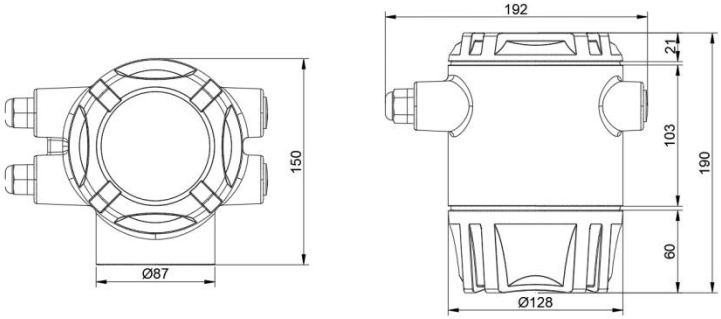

Unit:mm

Figure 27 Compact type

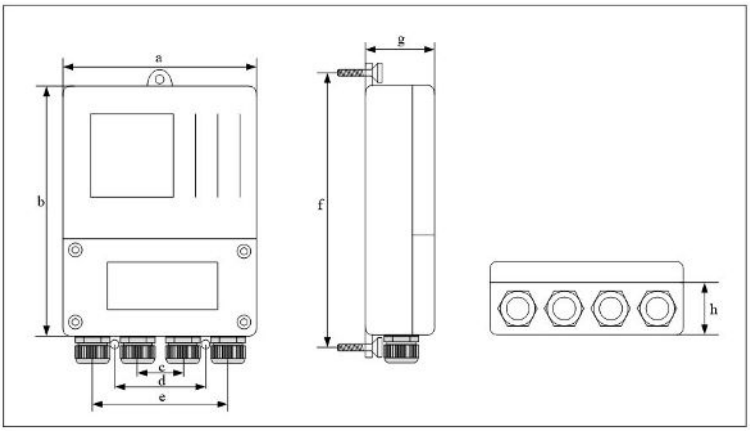

Figure 28 Remote type

Table 2

Dimension[mm]								Weight[Kg]
a	b	c	d	e	f	g	h	
164	214.5	34	70	102	233.5	69.7	45.7	0.6

Chapter 4 Electrical connection

4.1. Safety tips



Danger!

Only when the power is switched off, can we do all the work about electrical connections. Please pay all attention to the power supply on the nameplate!



Danger!

Please observe national installation regulations



Warning!

Please strictly observe local occupational health and safety regulations. Only those who have got properly trained are allowed to operate on the electrical equipment.



Tips!

Please check the nameplate of the equipment, and confirm whether the delivered contents are consistent with your order, and check whether the voltage indicated on the nameplate is correct. Otherwise, please contact manufacturer or supplier.

4.2. Connect signal and magnetic field current cable



Danger!

Only when the power is cut off can you connect signal and magnetic field current conductor.



Danger!

The equipment must be grounded in accordance with regulations so as to protect the operator from electrical shock.



Danger!

In case that equipment is used in explosion danger areas, special notes are given to explosion-proof instructions for safety tips.

Warning!

Please strictly observe local occupational health and safety regulations. Only those who have got properly trained are allowed to operate on the electrical equipment.

(1) Compact type (caliber: 65, refer to type selection manual for specific parameters)

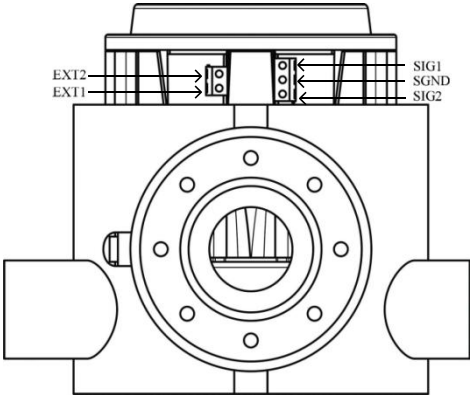

Figure 29

Connection description

① Excitation output: EXT1--Sensor excitation coil positive terminal
EXT1--Sensor excitation coil negative terminal

② Signal output: SIG1-The positive electrode sensor signal
SIG2--The negative electrode sensor signal
SGND--Signal ground

4.3. Potential Equalization

Danger!

No potential difference is allowed between the measuring sensor and casing or protective earth of converter. The electromagnetic flowmeter must be grounded separately during operation. If it is grounded with

other instruments or electrical devices, the leakage current may cause serial-mode interference to the measurement signal, or in a serious case, the electromagnetic flowmeter cannot work.

(1) The measurement sensor must be correctly grounded.

(2) The grounding conductor shall not transmit any interference voltage.

(3) It is not allowed to connect other electrical equipment to the grounding conductor at the same time.

4.4. Power supply

Danger!

The equipment must be grounded in accordance with regulations so as to protect the operator from electrical shock.

(1) 220VAC power supply

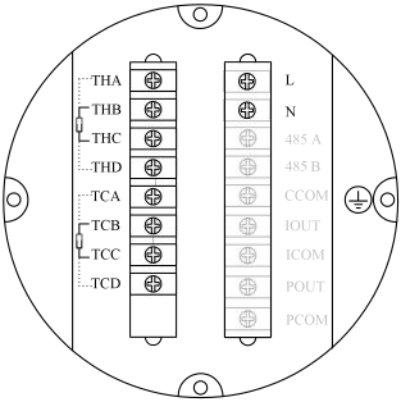

Figure 30

Tips!

Allowable range: 85VAC -245VAC，50Hz-60Hz

① L: AC live line

② N: AC neutral line

③ ⏚ : Connect ground wire to the ground screw

(2) 24VDC power supply

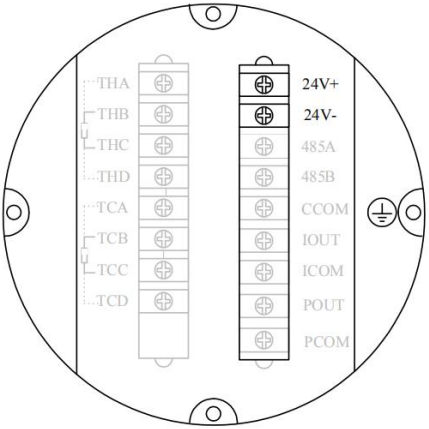

Figure 31

Tips!

Allowable range: 22VDC -26VDC

① 24+: 24VDC Power supply positive pole

② 24-: 24VDCPower supply negative pole

③ ⏚ : Connect ground wire to the ground screw.

4.5. Input termination

Warning!

The meter can only be installed, used, or operated by trained and authorized persons. This document will help you to establish favorable operating conditions so as to make sure that you use the equipment in a safe and effective way.

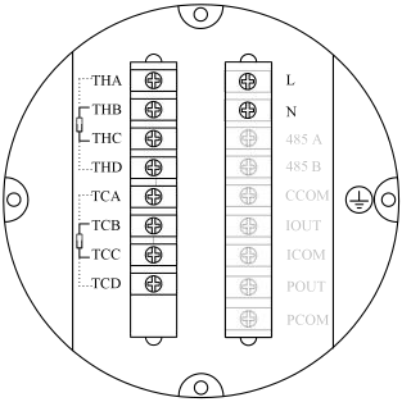

Figure 32

Supply and return water temperature input

THA, THB, THC, THD: water supply temperature sensor PT1000 input

TCA, TCB, TCC, TCD: return water temperature sensor PT1000 input

Four-wire thermal resistance wiring

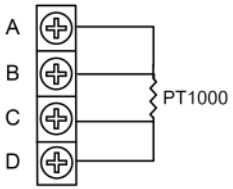

Two-wire thermal resistance wiring

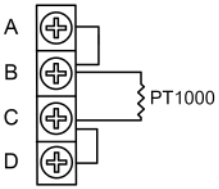

4.6. Output termination



Warning!

The meter can only be installed, used, or operated by trained and authorized persons. This document will help you to establish favorable operating conditions so as to make sure that you use the equipment in a safe and effective way.

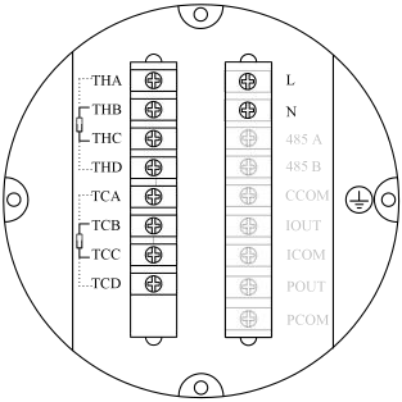

Figure 33

Current output

① IOUT, ICOM: (4~20) mA output (IOUT is connected to the positive terminal of the current input, and ICOM is connected to the negative terminal of the current input).

② Active mode: load RL≤750Ω; Imax≤22mA.

③ The current corresponds to the percentage of flow.

Communication output

④ 485A, 485B: RS485 communication output

⑤ CCOM: RS485 communication ground

⑥ Protocol: ModBus-RTU

Pulse, frequency output and relay out

① Pulse output: POUT, PCOM

② Relay out : ALM1, ALM2

③ Active mode: High 24V, 5mA drive current

④ Output electrical isolation: photoelectric isolation, isolation voltage: > 1000VDC

⑤ Scale

Frequency output: Frequency 2KHz (configurable 0-5 kHz), corresponding to the upper limit of the flow range

Pulse output: corresponding flow rate volume of each pulse (configurable) ; output pulse width: 0.1ms ~100ms , space ratio:1:1; Fmax <= 5000 cp/s

Electric wiring diagram 750Ω under load; Imax ≤ 22mA Current flow percent

⑥ Electric wiring diagram

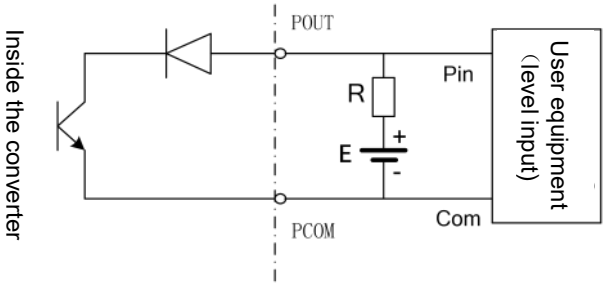

Figure 34

Additional remarks: pulse output is OC gate output, it needs external power supply. The general counters are equipped with pull-up resistors, and the signal can be directly connected therein.

Manufacturer's suggestion: use a pull-up resistor R of 2K, 0.5W, and 24V DC power supply for power supply

Chapter 5 Start up

5.1. Power on

Please check whether the installation is correct before power on, including:

① The meter must be installed following safety compliance.

② Power supply connection must be performed in accordance with the regulations.

③ Please check the electrical connection in the power supply is correct.

④ Tighten the converter shell back cover.

⑤ Tighten the back cover of the converter housing

5.2. Converter start up

The measuring instrument is consisted of measuring sensor and signal converter; the delivery can be put into service. All parameters and hardware are configured according to your order.

After energization, the instrument will perform self-check for one time.

Then it will immediately begin to measure and display the current values.

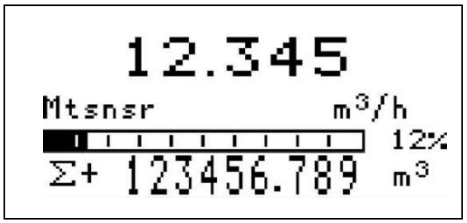

Figure 35 electromagnetic flow meter startup interface

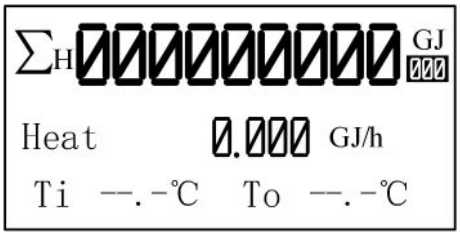

Figure 36 BTU meter startup interface

Chapter 6 Operation

6.1. Display and operating elements

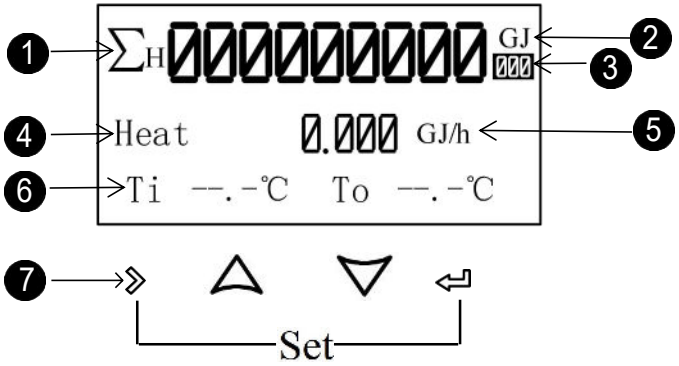

Figure 37 BTU meter

(1) The integral part of the heat accumulation;

(2) Heat accumulation unit;

(3) The fractional part of heat accumulation;

(4) Instantaneous value of heat/cold;

(5) Instantaneous unit of heat/cold;

(6) Heat related parameters;

(7) Mechanical keys/touch keys.

Heat-related parameters can be switched between each other by pressing the button ⏎

The heat screen can be switched to the flow screen by pressing the button ≫.

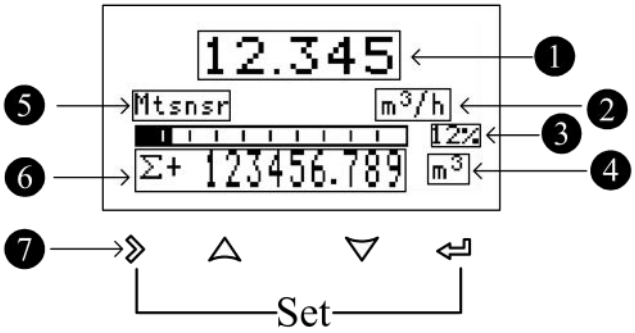

Figure 38 Electromagnetic flowmeter

(1) Real-time flow

(2) Real-time flow unit

(3) Real-time flow in percent of flow

(4) Accumulation flow unit

(5) System alarm information

(6) Cumulative amount and so on

Display information[Σ+]: Positive flow accumulation, [Σ-]: Negative flow accumulation, [Σ]: Net flow accumulation, [V]: Current velocity, [MT]: Current conductivity

(7) Operation keys: mechanical / photoelectric keys

Table3

Mark	Measuring mode	Menu mode	Function mode	Data mode
>	-	Switch menu categories	-	Data right shift
↲	Switch accumulative amount	Switch menu subclass	Confirmation	Confirm data
↑ ↓	-	-	Selection	Change data
> + ↲	Enter menu	Exit menu	-	-

6.2. Display (operation mode)

Photoelectric key operation: use a finger to click on the icon for more than half a second and release to finish button operation for once.

Except key combination, it is forbidden to put other fingers on the other photoelectric keys when operating the touch-key.

Photoelectric keys are optional, please see type selection manual for details.

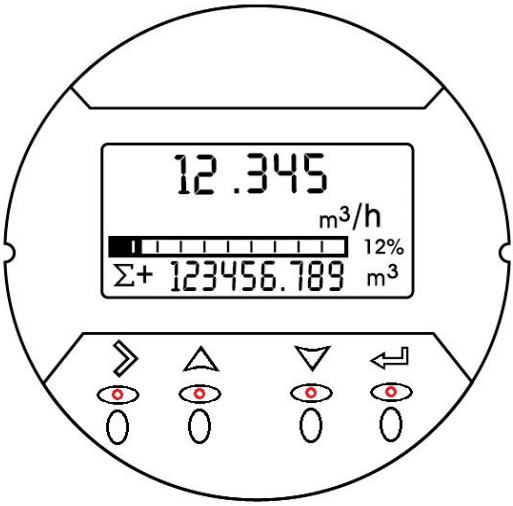

Figure 39

6.3. Display button operation instructions

Please open the converter cover before handling mechanical keys.

Press mechanical keys to enter configuration mode is shown in the next chapter.



Figure 40

6.4. Quick setup menu

Key parameters to facilitate the manufacturer and user to quickly set up the meter:

Press on ⟫ and ⏎ at the same time to enter the parameter setting interface.

Enter the password.

Quickly set the password: 300000（Used to modify the quick setup menu）

Table 4

NO.	Parameter	Setting mode	Parameter range	Default
1	Sensor drift diameter	Option	3-2000	50
2	Flow range	Figure	0-99999	35.000
3	Sensor coefficient	Figure	0-99999	1.000
4	Zero correlation	Figure	0-99999	0.0
5	Accumulation reset	Option	Y、N	N
6	Flow remove	Figure	0-99%	1%
7	Time constant	Figure	0-99S	2s
8	Exit configuration	Option	Y、N	N

6.5. Configuration details

Table 5

NO.	Parameter	Setting mode	Password level	Parameter range	Default
1-Flow					
1-0	Flow range	Figure	User	0-99999	35.000
	Set the maximum flow limit value. Used to calculate the frequency, output current limit calculation and alarm threshold calculation, etc				
1-1	Flow unit	Option	User	L、m^3、Kg、t/s、min、h、gal/m、gal/h	m^3/h
	Choose volume unit ,such as L, m^3, gal; the density will not calculated; Choose mass unit such as Kg, t; need 1-2 density parameter.				
1-2	Fluid density	Figure	User	0.000-99.000	1.000
	Used to calculate the mass flow, $Q_M = \rho V_M$. When the flow unit is volume, this parameter are not displayed. Density unit: g/cm^3				
1-3	Time constant	Figure	User	0-99S	2s
	Damping coefficient of the filter, select the average selected within the				

	time parameter as the real-time flow.				
1-4	Flow resection	Figure	User	0-10%	1%
	Flow volume is regarded as zero if it is below the setting value Zero means not removing.				
1-5	Flow direction	Option	User	Positive, Negative	Positive
	Used to change the direction of flow, when negative pole and positive pole signal cable are reversely connected, or the sensor is reversely installed, activate this function.				
1-6	Mode selection	Option	User	Positive, Negative	bidirection
	Set the direction of the flow measurement. Positive direction only measures forward direction measurement flow, negative direction only measures the reverse flow; bidirection indicates two-way flow measurement.				
1-7	Spike suppressor permission	Option	User	Y, N	N
	Indicate whether to enable peak inhibition function, used for filtering interference signals. When it's set to be N, 1-8, 1-9 configuration screens do not display. When the range of signal pulse is greater than parameters set in1-8 and lasts for a duration less than that set in 1-9, the system will consider it as interference signal and will not display and measure .				
1-8	Peak inhibition coefficient	Figure	User	0.01-0.8m/s	0.8
	The peak amplitude (not shown when peak inhibition allows configuration closing)				
1-9	Peak inhibition time	Option	User	0-3s	1
	The peak amplitude (not shown when peak inhibition allows configuration closing)				
1-10	Flow correction	Option	Manufacturer	Y, N	N

	permission				
	Indicates whether start using flow nonlinear correction function. In principle, used for small flow rate (less than 0.5 m/s) linear adjustment Designed with 4 sections of correction, divided into four flow points and four correction coefficients. The corresponding velocity of correction point must meet: Correction point 1 ≥ Correction point 2 ≥ Correction point 3 ≥ Correction point 4 ≥ 0 Correction calculation is conducted on the original sensor flow coefficient curve correction, therefore, the nonlinear correction function shall be disabled and sensor coefficient shall be marked. Then enable the nonlinear correction function according to the nonlinear of sensor and set correction coefficient for sectionized correction. If the coefficient is set right, there is no need for calibration. The original velocity stands for the actual flow velocity, and the revised flow velocity is called modified velocity, the modified computation formula is as follows: At the interval of the modified point 1 ＞The original flow velocity ≥ The modified point 2 The modified flow velocity = Correction factor 1 × The original flow velocity At the interval of the modified point 2 ＞The original flow velocity ≥The modified point 3 The modified flow velocity = Correction factor 2 × The original flow velocity At the interval of the modified point 3 ＞ The original flow velocity ≥ The modified point 4 The modified flow velocity = Correction factor 3× The original flow velocity At the interval of the modified point 4＞The original flow velocity ≥ 0 The modified flow velocity = Correction factor 4× The original flow velocity Note: when set the modified point, shall keep the following relationship				

	Modified point 1 ＞Modified point 2 ＞Modified point 3＞ Modified point 4＞ 0 The intermediate value of correction coefficient is 1.0000, if the correction coefficient is greater than 1 , then increase the flow velocity ; if the correction coefficient is less than 1 , then decrease the flow velocity ;				
1-11	Flow correction point 1	Figure	Manufacturer	0.0-99.999	0
	Flow rate modified point 1, when The flow rate function shut down , this parameter does not display.				
1-12	Flow correction coefficient 1	Figure	Manufacture	0.0-99.999	1.000
	Flow rate correction factor 1, when The flow rate function is disabled, this parameter does not display.				
1-13	Flow correction point 2	Figure	Manufacturer	0.0-99.999	0
	Flow rate modified point 2, when The flow rate function is disabled, this parameter does not display.				
1-14	Flow correction coefficient 2	Figure	Manufacture	0.0-99.999	1.000
	Flow correction factor 2. This parameter is not displayed when the flow function is off.				
1-15	Flow correction coefficient 3	Figure	Manufacturer	0.0-99.999	0
	Flow rate modified point 3, when The flow rate function is disabled, this parameter does not display.				
1-16	Flow correction coefficient 3	Figure	Manufacturer	0.0-99.999	1.000
	Flow rate modified point 3, when The flow rate function is disabled, this parameter does not display.				
1-17	Flow correction	Figure	Manufacturer	0.0-99.999	0

	coefficient 4				
	Flow rate modified point 4, when The flow rate function is disabled, this parameter does not display.				
1-18	Flow correction coefficient 4	Figure	Manufacturer	0.0-99.999	1.000
	Flow rate modified point 4, when The flow rate function is disabled, this parameter does not display.				
2- Current output					
No.	Type	Option	Password level	Parameter range	Default
2-0	Reverse output permission	Option	User	Y，N	N
	When flow direction is reverse, whether 4-20 ma output is needed, pulse/frequency; cannot be disabled at positive flow.				
2-1	Adjust K	Figure	User	0-99999	1.000
	Used for adjusting the output current value, I = Kx + B				
2-2	Adjust B	Figure	User	0-99999	0.000
	Used for adjusting the output current value, I = Kx + B				
2-3	Output current	Display	User	4.00-20.00	--
	Display the current value(mA) of the current output				
3 - Pulse/frequency/alarm output					
3-0	Pulse output type	Option	User	Frequency, pulse, alarm	Frequency
	Frequency ,pulse equivalent/alarm output optional				
3-1	Transistor state	Option	User	High/low level	High level
	Select the level state of no frequency output, no pulse equivalent output, no alarm output				
3-2	Max. frequency	Figure	User	0-5000	2000

	Set the corresponding frequency of the real-time flow upper limit ; When selecting frequency output, this parameter displays.				
3-3	Pulse value （L/P)	Option	User	0.001-999.999	1.0
	Set the cumulant that each pulse stands for ; When selecting equivalent output, this parameter displays.				
4 - Accumulation					
4-1	Accumulation clearance	Option	Manufacturer	Y, N	N
	Clear accumulation amount.				
4-2	Positive accumulation integer	Figure	Manufacturer	0-999999999	0
	Set total positive integer part				
4-3	Positive accumulation decimal	Figure	Manufacturer	0.0-0.999	0.0
	Set total positive decimal part				
4-4	Negative accumulation integer	Figure	Manufacturer	0-999999999	0
	Set reverse total integer part				
4-5	Negative accumulation decimal	Figure	Manufacturer	0.0-0.999	0.0
	Set reverse total decimal part				
5- Alarm contacts (3-0 set to show the configuration at alarm output)					
No.	Type	Option	Password level	Parameter range	Default
5-0	Alarm 1 transistor state	Option	User	High/Low lever	High level
	Touch spot outputs high and low level under no alarm state .				
5-1	Alarm1 output	Option	User	Y/N	N

	allowed				
	Allow contact 1 output of main switch, when it's set to be N, the following parameters do not display.				
5-3	Allow alarm1 empty pipe	Option	User	Y/N	N
	Allow empty pipe alarm output switch. When the system detects empty pipe, contact 1 outputs alarm signal automatically. When the allowed alarm output configuration is N, this parameter does not display.				
5-4	Allowed alarm1 exceeds upper limit	Option	User	Y/N	N
	Allow flow rate upper limit alarm output switch. When the real-time flow is greater than the flow rate upper limit value, contact 1 outputs alarm signal automatically. See 7-1 for details. When allowed alarm output configuration is N, this parameter is not displayed.				
5-5	Allowed alarm1 exceeds lower limit	Option	User	Y/N	N
	Allow flow rate lower limit alarm output switch. When the real-time flow is smaller than the flow rate lower limit value, contact 1 outputs alarm signal automatically. See 7-2 for details. When allowed alarm output configuration is N, this parameter is not displayed.				
7- Alarm setup					
No.	Type	Option	Password level	Parameter range	Default
7-0	Max. flow value alarm	Figure	User	0-999.9%	100%
	Set the upper limit alarm value and range percentage.				
7-1	Min. flow value alarm	Figure	User	0-999.9%	0%
	Set the lower limit alarm value and range percentage.				
7-2	Alarm	Figure	User	0-99.9%	1%

	hysteresis				
	Used to eliminate the alarm disturbance Upper limit elimination conditions: real-time flow is less than the upper limit alarm value minus return difference Lower limit elimination conditions: real-time flow is greater than the lower limit alarm value plus return difference				
7-3	Display alarm permission	Option	User	Y/N	N
	Allow alarm information to be displayed on the main screen				
8- System					
8-0	Language	Option	User	Chinese/ English	Chinese
	Set configuration display language				
8-1	Display accuracy	Figure	User	0-4	2
	The decimal digits of real-time volume.				
8-2	Contrast	Figure	User	0-100%	50%
	Contrast ratio of Liquid crystal display				
8-3	Modbus address	Figure	User	1-247	8
	Communication Protocol instrument address based on the RS485 protocol Modbus RTU				
8-4	Baud rate	Option	User	1200、2400、4800、9600、19200 、38400、57600	9600
	Baud rate of serial communication of physical layer				
8-5	Even-odd check	Option	User	NONE/ODD/ EVEN	NONE
	Serial communication verification mode of physical layer				
8-6	Byte swap	Option	User	2-1 4-3 、 3-4 1-2、4-3 1-2、1-2 3-4	2-1 4-3

	Byte exchange sequence of physical layer serial communication				
8-7	Device address	Figure	User	0-999999	000001
	HART device identification number				
8-8	User password	Figure	User	00000-999999	000000
	Used for check and modify parameter configuration; When the manufacturer's password is entered, this parameter is not displayed. Ex-factory password: 200000				
9-Empty Pipe parameters					
9-0	Empty pipe threshold value	Figure	Manufacturer	0-100%	50%
	Threshold for empty tube alarm judgment				
9-1	Actual electrical conductivity	Display	Manufacturer		
	Display the measured conductivity equivalent of the fluid. For general natural water: equivalent < 200 when the tube is full, equivalent > 1200 when the tube is empty (the equivalent is related to the fluid conductivity and the length of measuring line, it is recommended to use double shielded wire when the wiring distance is 20m , otherwise it will affect empty detection function.)				
9-2	Empty pipe check permission	Option	Manufacturer	Y, N	Y
	Set whether to enable empty detection function				
9-3	empty pipe check max	Figure	Manufacturer	0-9999	1200
	Measured conductivity equivalent value when the tube is empty, default values can be used for general natural water. It needs to observe whether the empty pipe for special fluid is that displayed as 9-1, then record it in 9-3.				
9-4	empty pipe check min	Figure	Manufacturer	0-9999	200

	Measured conductivity equivalent value when the tube is full, default values can be used for general natural water. It needs to observe whether the empty pipe for special fluid is that displayed as 9-1, then record it in 9-4.				
9-5	Empty pipe detection backlash	Figure	Manufacturer	0-9999	30
	For the return difference judged by the empty pipe detection, the default value can be directly used within 20 meters of the signal line.				
10-Sensor					
10-0	Sensor coding	Figure/mark	Manufacturer	13 digitals	
	Used for identify sensors.				
10-1	Factory ID number	Figure	Manufacturer	6 digitals	
	Identification number				
10-2	diameter	Option	Manufacturer	3-2000	50
	Caliber of sensor				
10-3	Zero adjustment	Option	Manufacturer	-9.99-9.99mv	0.00mv
	Sensor code value under the condition of static and full pipe (mean value of 30 seconds) Under the circumstance of sensor symmetry and wiring is good (well shielded) and within the scope of code value + / - 0.1, no need to adjust.				
10-4	Sensor coefficient	Figure	Manufacturer	0-99999	
	The flowmeter coefficient was calibrated by the sensor manufacturer according to the actual flow volume. For details, see sensor coefficient calibration section				
10-5	Cali coefficient	Figure	Manufacturer		
	Ex-factory unification calibration coefficient of converter				
10-6	Zero correction	Figure	Manufacturer	0-99.999	
	For correcting the sensor’s nonlinear correction for small flow (below 0.3				

	m/s) For details, see sensor coefficient calibration section.				
10-7	Excitation mode	Option	Manufacturer	3.125Hz、6.25 Hz、12.5 Hz、25 Hz	6.25Hz
	Selection of excitation frequency 3.125Hz 、6.25Hz、12.5Hz、25 Hz Option 1: 3.125Hz Option 2: 6.25Hz				
10-9	Gain selection	Option	Manufacturer	2001/3/9	X3
	Gain selection: Adjustment of the gain can change the range of flow speed. Gain magnitude: 1, 3, 9				
11-Test parameters					
11-0	Allow test	Option	Manufacturer	Y/N	N
	Set to Y to make the test flow rate effective, and automatically return to N after power off.				
11-1	Flow rate	Option	Manufacturer	-99.999~99.999	1.000
	To set the simulated flow rate, it will take effect after setting "11-0 Allowed Test" to "Y".				
11-2	Source code	Option	Manufacturer	Y/N	N
	After set to Y, the original code of the signal will be displayed on the running screen, and this screen will display the firmware version number and product serial number at the same time				

6.5.1. Thermal Configuration Details

Heat unit and time configuration

Table 6

No	Type	Option	Password level	Parameter range	Default
20-1	Heat unit	Option	User	kW，MW，kJ/h，MJ/h，GJ/h	GJ/h
	The heat unit is synchronized with the total unit. Please be careful to modify this parameter in normal use.				
20-2	Temperature damping time (s)	Option	User	0~99	2
	Temperature filter damping coefficient, which sets the time constant used to smooth the temperature display.				

20-3	4mA~20mA output	Option	User	flow/power	Flow
	Select flow/power as the 4mA~20mA output type, and the power output is in kW.				
20-4	Power upper limit (kW)	Option	User	0.001~999999	1000.00
	Set the power cap value. It is used for threshold calculation such as frequency and current output upper limit. This parameter is displayed when 4mA~20mA output type is selected as power.				
20-5	Pulse output	Option	User	flow/energy	flow
	Select Flow/Energy as the pulse output type, and the energy output is in kWh/Pulse. It is necessary to first set "3-0 pulse output type" to pulse equivalent output.				
20-6	equivalent(kWh/Pulse)	Option	User	0.001~999999	0.1
	Sets the cumulative value represented by each pulse. Select energy as pulse output type, this parameter displays				
20-7	Date(YY/MM/DD)	Option	User		
	Set the date of the meter, YY/MM/DD are year/month/day in turn.				
20-8	Date(HH/MM/SS)	Option	User		
	Set the date of the meter, HH/MM/SS are hours/minutes/seconds.				

Heat signal parameter configuration

Table 7

21-Heat Signal Parameters					
No	Type	Option	Password level	Parameter range	Default
21-0	Medium	Option	User	Water/other	Water
	User selects measurement medium, water or other				
21-1	Pressure	Option	User	0.6MPa/1.6MPa	0.6MPa
	Set the pressure value of the water Select water as the measurement medium, this parameter displays				
21-2	specific heat capacity	Option	User	1.00~100.00	4.20
	Set the specific heat capacity of the heat calculation of other media When the measurement medium is selected as other medium, this parameter displays				
21-3	density(kg/m3)	Option	User	100~9999.99	1000.00
	Sets the density value of the heat calculation for other media When the measurement medium is selected as other medium, this				

	parameter displays				
21-4	Small temperature difference setting(℃)	Option	User	0.0~3.0	0.2
	When the temperature difference between Tin and Tout is less than the small temperature difference setting, no heat is generated by default.				
21-5	Temperature calibration	Option	User	NO,Ti-1000,Ti-1500,To-1000,To-1500,Tio-1000,Tio-1500	NO
	Temperature calibration (PT1000), Ti-1000 (calibration temperature lower limit 1000Ω), Ti-1500 (calibration temperature upper limit 1500Ω), To-1000 (calibration temperature lower limit 1000Ω), To-1500 (calibration temperature upper limit 1500Ω), Tio-1000 (calibration supply and return temperature lower limit 1000Ω), Tio-1500 (calibration supply and return temperature upper limit 1500Ω)				
21-6	Tin compensation(℃)	Option	User	-3.0~3.0	0.0
	Supply temperature compensation Tin compensation setting value				
21-7	Tout compensation(℃)	Option	User	-3.0~3.0	0.0
	Return temperature compensation Tout compensation setting value				

Heat accumulation configuration

Table 8

22-Heat accumulation					
22-0	Total energy reset	Option	User	Y、N	N
	Total amount of heat and cooling accumulated				
22-1	Heat Total Integer	Number	User	0~999999999	
	Sets the heat total in the integer part				
22-2	Heat Total Decimals	Number	User	0.0~0.999	
	Set the fractional part of the total heat				
22-3	Cooling Total Integer	Number	User	0~999999999	
	Set the integer part of the total cooling capacity				
22-4	Cooling Total Decimals	Number	User	0.0~0.999	
	Set the fractional part of the total cooling capacity				

6.6. Brief operating instruction and function

6.6.1. Parameter selection and adjustment

Press ⟩ and ⏎ to enter into parameter setting interface.

Password need to be input by then

The initial user password: 200000 (used for modifying the user level parameter)

The initial manufacturer password: 100000 (used for modifying the manufacture level parameter)

The initial manufacturer password: 300000 (to set up parameter quickly)

Thermal configuration password: 316000 (used to modify thermal related configuration)

After entering the configuration parameters, the parameters can be modified by the following operation:

Users can conduct the switch operation in the menu by pressing ⟩ and button, switch among the parameter item of menu by pressing the ⏎ button and meanwhile store a modified parameter value. Adjust the parameter value by pressing △ and ▽ button. Such as flow upper limit.

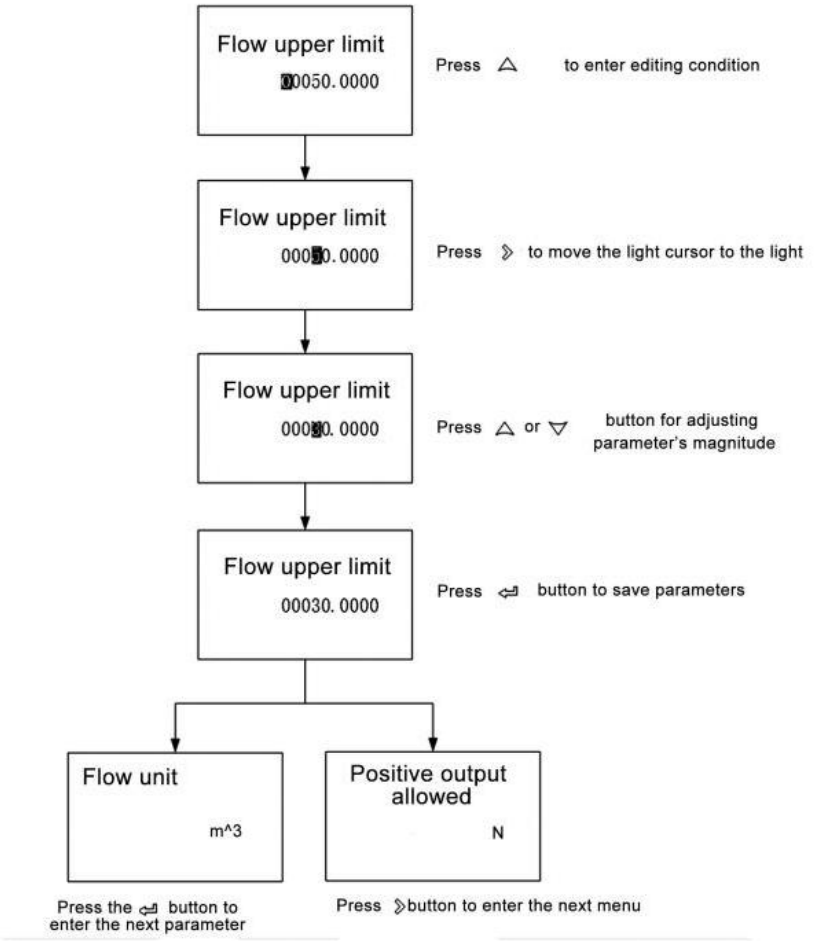
Flow upper limit
00050.0000
Press △ to enter editing condition
Flow upper limit
00050.0000
Press ≫ to move the light cursor to the light
Flow upper limit
00030.0000
Press △ or ▽ button for adjusting parameter's magnitude
Flow upper limit
00030.0000
Press ⏎ button to save parameters
Flow unit
m^3
Positive output allowed
N
Press the ⏎ button to enter the next parameter
Press ≫button to enter the next menu

Figure 41

6.6.2. Display measurement

This picture will display after startup

∑+: Forward cummulant ，∑-: Reverse cummulant, Σ:Net cummulant, V: Current flow velocity，MT: Conductivity equivalent

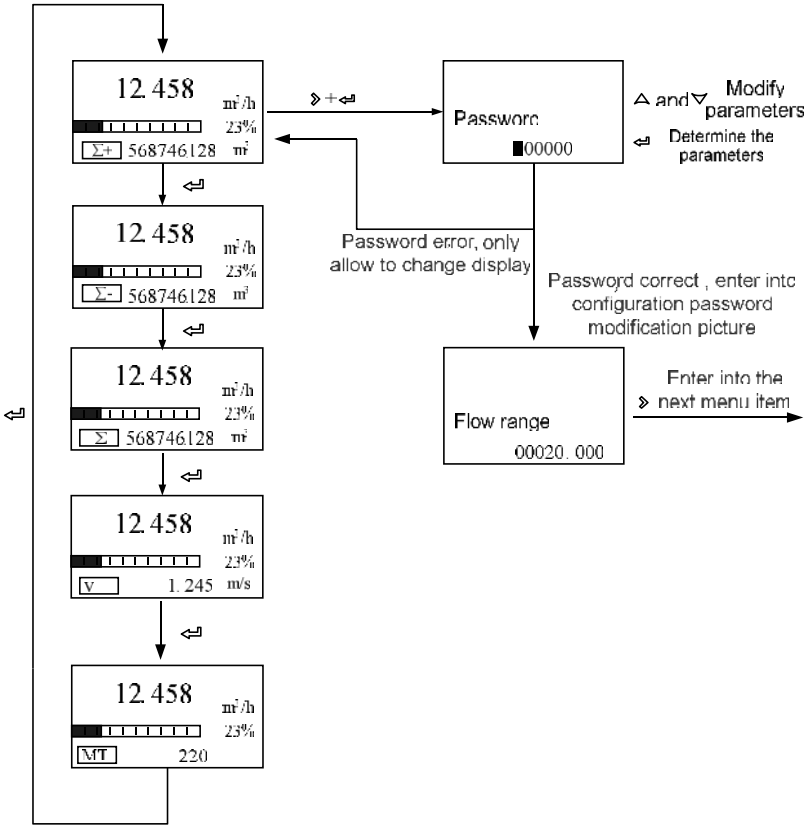

Figure 42

6.6.3. Flow setup and analog output menu

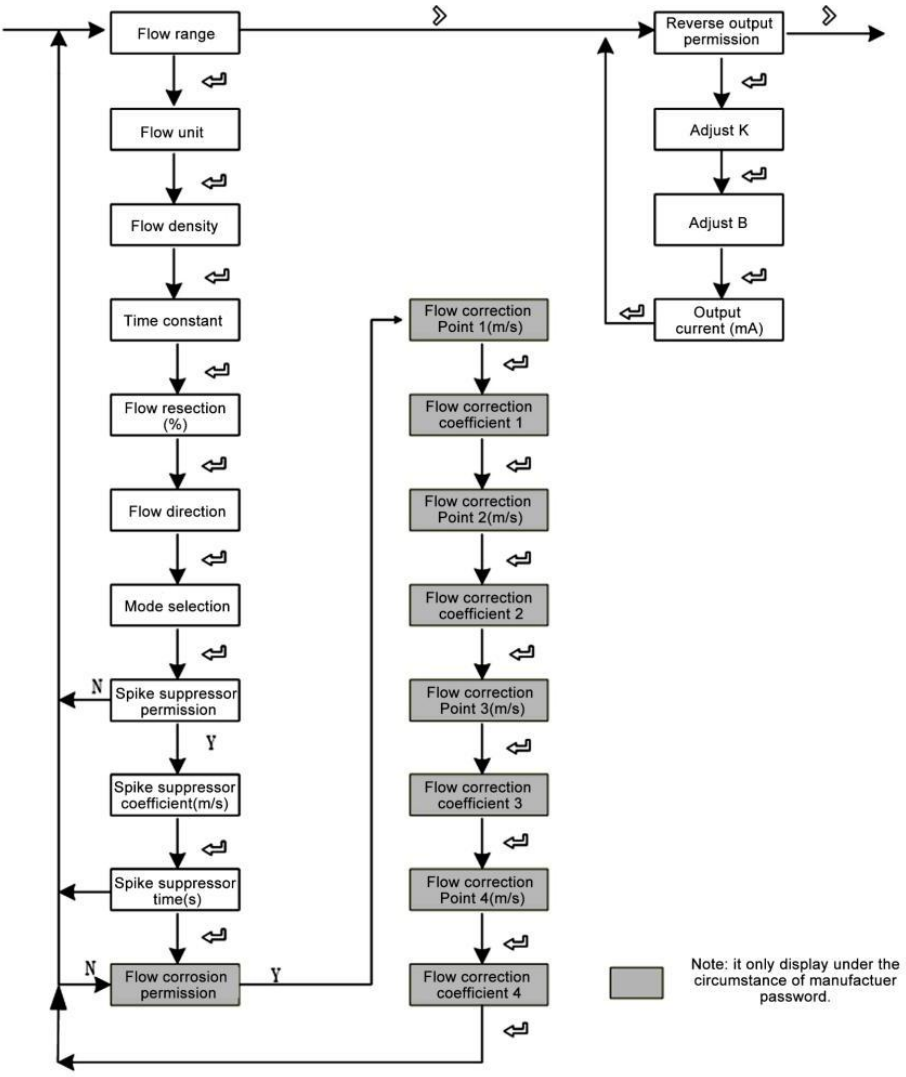

Figure 43

6.6.4. Pulse output and total set menu

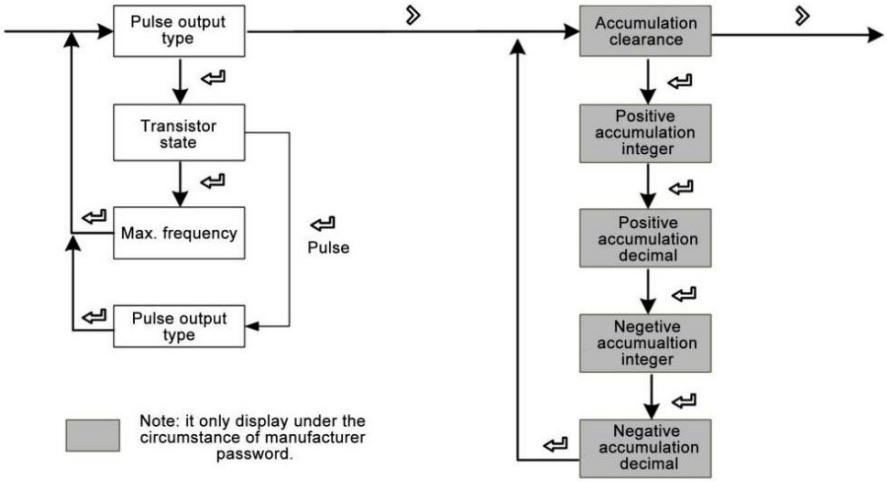

Figure 44

6.6.5. Relay out setup menu

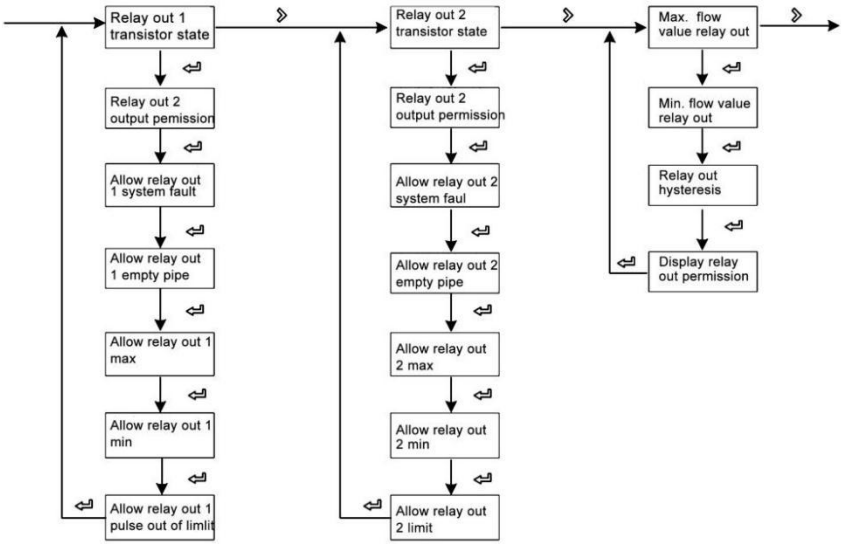

Figure 45

6.6.6. System function, empty pipe function, sensor function, test function setup menu

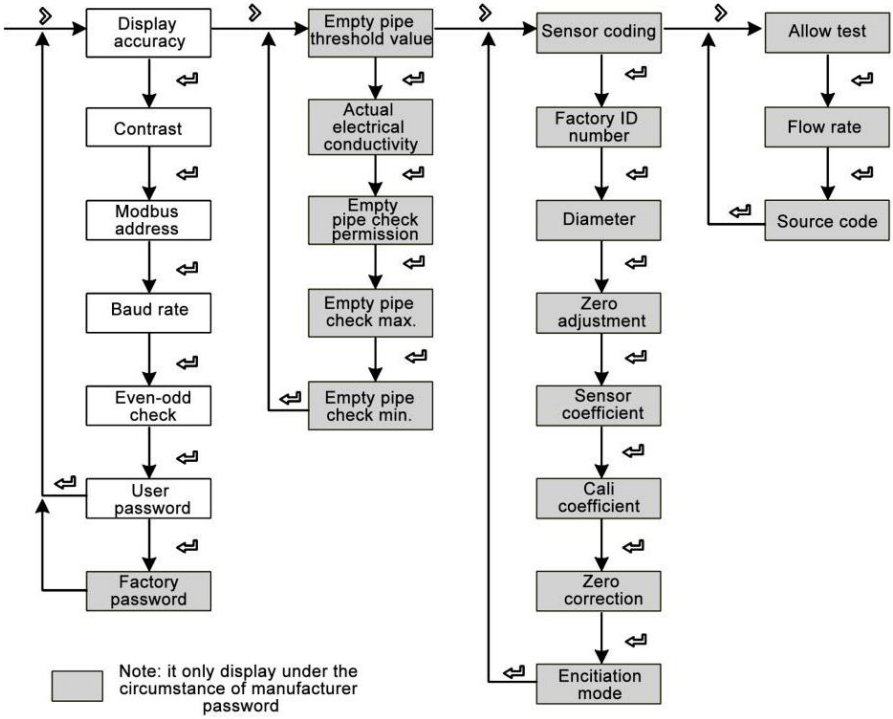

Figure 46

Chapter 7 Display Functions

7.1. System Information

Flowmeter itself has the self-diagnosis function, in addition to the power supply and circuit board hardware failures; it can correctly provide the corresponding alarm message to the fault in general application.

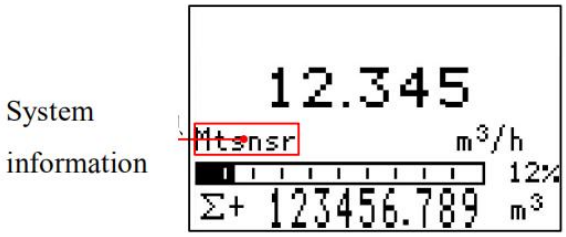

Figure 47 Display Position in Measuring Picture

Table 9

System Information Sheet

Display	Alarm content
Mtsnsr	Sensor empty pipe
Hi	The current real-time flow rate exceeds the setting flow limit
Lo	The current real-time flow rate is below the setting flow lower limit
Pls	The pulse output frequency exceeds the setting frequency upper limit
AD_Hi	Sensor signal is greater than the AD sampling of the upper limit
Rng	The current real-time flow rate exceeds the setting flow limit
Rng_Hi	The current real-time flow rate exceeds system AD sampling limit
Pls_Hi	The range scope set by user exceeds the upper limit of pulse output.

7.2 Report Operation Instructions

The user can use » key switch between the heat screen, the flow screen and the cumulative report screen with the keys.

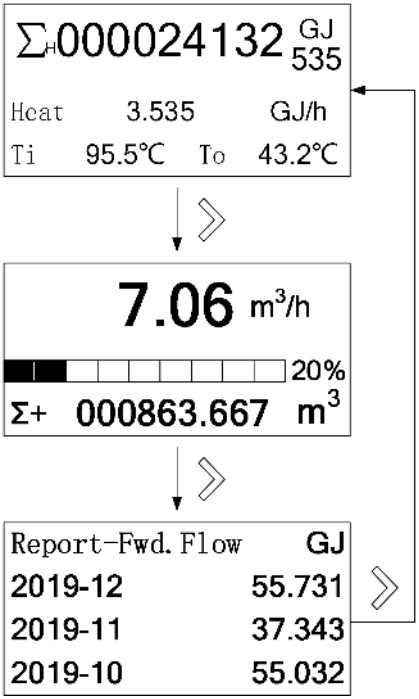

Cumulative report query

On the cumulative report screen, use ⏎keys to switch between report query status, report type switching status, and cumulative data unit switching status

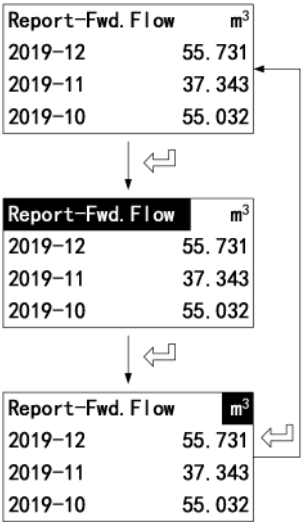

In the report query state, use △ and ▽ keys to switch the report list

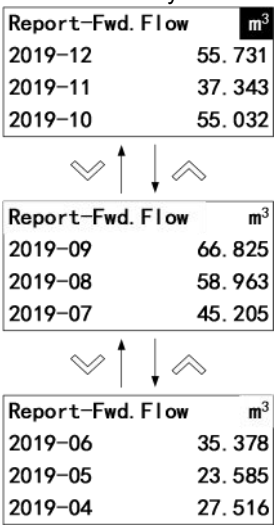

In the report type switching state, use the △ and ▽ keys to switch the reportdata type.

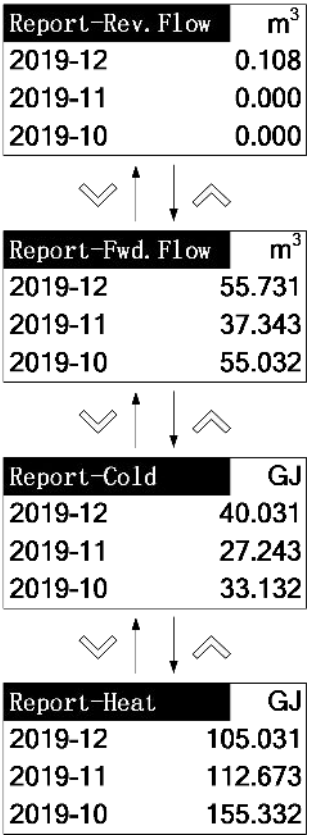

In the accumulated data unit switching state, use the △ and ▽ keys to switch the accumulated data unit.

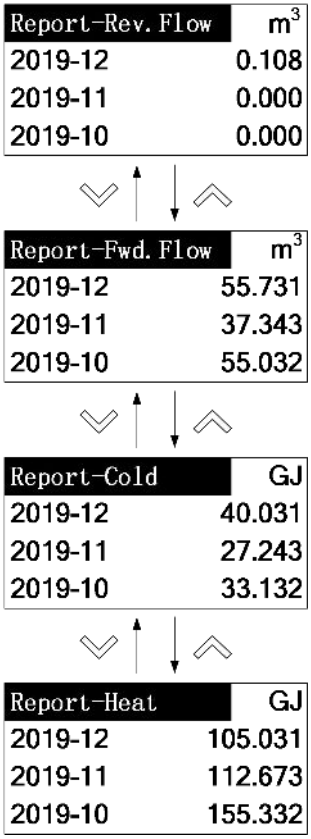

Cumulative report configuration

Menu 23-0, set parameter Y to clear cumulative report

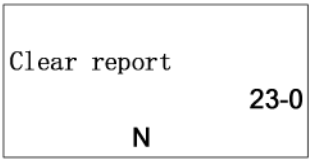

7.2. Pulse/Frequency/Current Output

7.2.1. Pulse equivalent output

It is mainly used for sensor manufacturer coefficient calibration and user measurement use.In the third way configuration parameter settings:
Pulse equivalent corresponding accumulate indicate each pulse corresponding to the relevant volume number.

For example:

Parameter setting as 0.1L/p

The current real-time flow 3.6m^3/h

Number of pulses per second output is: 3.6×1000/3600/0.1=10

Notes:

When the parameter is set to 0.4L/p

The current real-time flow is 3.6m^3/h

Number of pulses per second output is: 3.6×1000/3600/0.4=2.5

If encounter the above situation, the decimal part of 2.5 pulses will automatically get into the next second output, data loss will not happen.

The pulse equivalent shouldn't be set too small when the pipe flow is small,otherwise it will cause pulse output exceeds the limit,then the main screen will appear system alarm information.Users need to reset pulse equivalent parameters. Similarly, when the pipe flow is small the selected pulse equivalent cannot too big; otherwise it will cause the instrument to output a pulse for a long time,and further cause measurement error.

Pulse equivalent output is different from frequency output;pulse output will output a pulse when a pulse equivalent is accumulated enough,so the pulse output is uneven. Counter instrument should be used when measuring pulse output. Frequency meter instrument shouldn't be used.

7.2.2. Frequency Output

It is mainly used for manufacturer coefficient calibration and user measurement use. In the third group configuration parameters setting: frequency corresponds to

real-time flow rate, upper frequency limit corresponds to max. flow rate.

Note: maximum frequency is set to 5000 Hz.

7.2.3. Current Output

Mainly used for transmitting output to other intelligent instruments, such as: digital display table, recorder, PLC, DCS, etc.

The current output type: 4 - 20mA.

The current valve corresponds to real-time flow rate, 20mA corresponds to range limit, 4 mA corresponds to range limit.

Conversion relationship

$$I_{Real\ time} = \frac{Q_{Real\ time}}{Q_{max}} 16.00 + 4.00$$

Notice:

$Q_{real\ time}$ Indicate real-time flow rate

Q_{Max} Indicate current instrument range

$I_{real\ time}$ Indicate real-time current value

7.3. Communication

This instrument provides a standard RS485 communication interface, using the international standard MODBUS-RTU communication protocol that supports 04 Read Holding Registers command.

7.3.1. Registered Address

Communication data and register address are in the following table.

Table 10

Parameter	Type	Address	Explanation
Real-time flow rate	float	100	
Real-time flow velocity	float	102	
Flow percentage	float	104	50 stands for 50%
Electric conductivity	float	106	

Forward flow accumulation of integer	ulong	108	
Forward flow accumulation of decimal	ulong	110	The decimal part magnifies by 100 times, 123 stands for 0.123
Reverse flow accumulation of integer	ulong	112	
Reverse flow accumulation of decimal	ulong	114	The decimal part magnifies by 1,000 times 123 stands for 0.123
Instantaneous heat	float	120	
Input temperature	float	122	
Output temperature	float	124	
Heat accumulation integer	ulong	126	
Heat accumulation decimal	ulong	128	The decimal part magnifies by 1,000 times 123 stands for 0.123

Cooling cumulative integer	ulong	130	
Cooling Cumulative Decimals	ulong	132	The decimal part magnifies by 1,000 times 123 stands for 0.123
heat unit	ushort	134	0x00: kW 0x01: MW 0x02: kJ/h 0x03: MJ/h 0x04: GJ/h
Cumulative heat unit	ushort	135	0x00: kWh 0x01: MWh 0x02: kJ 0x03: MJ 0x04: GJ

Note: Float/ulong/long type data, Communication transmission is in byte order2-1-4-3; ushort type data transmission is in accordance with 2-1.

7.3.2. Communication Configuration

Mailing address: 1-247

Default address: 8

Baud rate: 1,200; 2,400; 4,800; 9,600; 19,200; 38,400; 57,600;

The default baud rate: 9600

Check: no check, odd parity, parity; Default no check;

For 32-bit data (long plastic or floating point) arranged in the communication frame;

Example: Long integer 16909060(01020304H): 03 04 01 02

Floating number 4.00(40800000H): 00 00 40 80

7.3.3. Readout Real-time Quantity Floating-point Communications Example:

Real-time floating point number reading

Send message: 08 04 00 63 00 02 81 4C

Return message: 08 04 04 22 6E 41 3F 79 61(Real-time flow：11.95)

Forward flow rate accumulate readout

Send message: 08 04 00 6B 00 04 80 8C

Return message: 08 04 08 00 6C 00 00 00 7B 00 00 D6 8E (The cumulative integer: 108, Cumulative decimal: 0.123, Accumulation: 108.123)

7.3.4. Hart communication

Hart Communication

This instrument provides Hart 6.0 communication interface and supports the following communication commands.

HART command 0: Read identification code

Returns the extended device type code, version and device identification code.

Table 11

Request	
Non	
Response	
Byte0	254
Byte1	Manufacturer ID
Byte2	Equipment Type
Byte3	Minimum number of precursors requested (primary->slave)
Byte4	Generic command file version number
Byte5	Device specification version number
Byte6	Device software version number
Byte7	First five bits: the device hardware version number, Last three bits: the physical signal type
Byte8	Equipment logo
Byte9-11	Device ID number
Byte12	Minimum number of leading codes for the response (slave->primary)
Byte13	Maximum number of device variables
Byte14-15	Configuration modification count
Byte16	Additional device status (maintenance required/parameter alarms)

HART Command 1: Read Primary Variable (PV)

Returns the value of the primary variable as a floating point type.

Table 12

Request	
Non	
Response	
Byte0	Primary variable unit code
Byte1-4	Primary variable value

HART Command 2: Read primary variable current value and percentage

Reads the primary variable current and percentage. The primary variable current always matches the AO output current of the device. The percentage is not limited to 0-100% and will track to the upper and lower limits of the sensor if the range of the primary variable is exceeded.

Table 13

Request	
Non	
Response	
Byte0-3	Primary variable current in milliamps (mA)
Byte4	Primary variable unit code
Byte5-8	Primary variable value
Byte9	Secondary variable unit code
Byte10-13	Secondary variable value
Byte14	Tertiary variable unit code
Byte15-18	Tertiary variable value
Byte19	Quaternary variable unit code
Byte20-23	Quaternary variable value

HART Command 6: POLLING Address

This is the data link layer management command. This command writes the Polling address to the device, which is used to control the primary variable AO output and provide the device identification.

Only when the Polling address of the device is set to 0, the primary variable AO of the device can output. If the address is 1~15, the AO is inactive and does not respond to the application process, and the AO is set to minimum at this time; and the third bit of the transmission status is set - the analog output of the primary variable is fixed; the upper/lower alarm is invalid. If the Polling address is changed back to 0, then the primary variable AO is active again and can also respond to the application process.

The second byte returns whether the device is in current mode. Only current mode is enabled to use the following commands.

40#：Enter/Exit fixed current mode

45#：Adjust the current zero point

46#：Adjust current gain

66#, 67#, 68#: Analog output mode

Table 14

Request	
Byte0	Polling address of device
Byte1	Current mode code
Response	
Byte0	Polling address of device
Byte1	Current mode code

HART Command 14: Read Primary Variable Sensor Information

Reads the primary variable sensor serial number, sensor upper and lower limit/minimum accuracy (Span) unit code, primary variable sensor upper limit, primary variable sensor lower limit, and sensor minimum accuracy. The sensor upper and lower limit/minimum accuracy (Span) units are the same as those of the primary variable.

Table 15

Request	
Non	
Response	
Byte0-2	Primary variable sensor serial number

Byte3	Primary variable sensor upper and lower limit and minimum accuracy unit codes
Byte4-7	Upper limit of primary variable sensor
Byte8-11	Lower limit of primary variable sensor
Byte12-15	Minimum accuracy of primary variable sensor

HART Command 15: Read Device Information

Reads the primary variable alarm selection code, primary variable transfer (Transfer) function code, primary variable range unit code, primary variable upper limit value, primary variable lower limit value, primary variable damping value, write protect code, and primary issuer code.

Primary variable damping values are used for device range percentages and variable flows.

Table 16

Request	
Non	
Response	
Byte0	Primary variable alarm selection code
Byte1	Primary variable transfer function code
Byte2	Primary variable upper and lower range value unit code
Byte3-6	Upper limit value of primary variable
Byte7-10	Lower limit value of primary variable
Byte11-14	Primary variable damping value, unit: s
Byte15	Protection code
Byte16	Trademark publisher code
Byte17	Primary variable analog channel flag, whether the analog input channel for field devices
Byte18-20	Date

Command 34: Primary Variable Damping Value

This is a command about the primary variable.

The primary variable damping value represents a time constant (the output to the step response should be 63% of the steady state value when that time is up). Both

analog and digital outputs of the variable use this variable.

Table 17

Request	
Byte0-3	Primary variable damping value, unit: s.
Response	
Byte0-3	Actual primary variable damping value, unit: s.

Command 35: Primary Variable Range Value

This is a command about the range of the primary variable.

The upper and lower limits of the primary variable range are independent, and most devices allow the upper range of the device to be lower than the lower limit in order for the device to operate at the reverse output.

The units of the primary variable range received by this command do not affect the units of the primary variable for that device. The primary variable range value is returned in the units received.

Table 18

Request	
Byte0	Primary variable range unit code
Byte1-4	Upper range limit of primary variable
Byte5-8	Lower limit value of primary variable
Response	
Byte0	Primary variable range unit code
Byte1-4	Upper range limit of primary variable
Byte5-8	Lower limit value of primary variable

Command 40: Enter/Exit fixed primary variable current mode

This command is for the loop current.

The device is configured into fixed primary variable current mode, and the response value shows the actual current value of the current device.

If the request value is set to "0", the fixed current mode will be exited, as well as when the device is powered off.

Table 19

Request	
Byte0-3	Fixed primary variable current value, unit: mA.
Response	
Byte0-3	Actual fixed primary variable current value, unit: mA.

Command 44: Primary variable unit

This is a command about the primary variable.

Select a primary variable unit, and the primary variable value and range are returned in that unit. The upper and lower limits of the primary variable sensor and the minimum accuracy Span of the primary variable also use this value as the unit.

Table 20

Request	
Byte0	Primary variable unit code
Response	
Byte0	Primary variable unit code

Command 45: Adjusts the zero point of loop current

This is a command for the loop current.

Adjusts the loop current value to 0 or the lower value, usually setting the loop current to 4.00 mA. The current value sent may be rounded or truncated and will return the current value of current output.

If the device is not in the correct loop current mode or the current is not set to the exact minimum value, response code 9 - Incorrect Current Mode or Value - is returned.

Table 21

Request	
Byte0-3	External measured current value, unit: mA.
Response	
Byte0-3	Actual measured primary variable current value, unit: mA.

Command 46: Adjust Loop Current Gain

This is a command about the loop current.

Adjusting the loop current value to the maximum will typically set the loop current to 20.00 mA. the current value sent may be rounded or truncated and will return the current value of current output.

If the device is not in the correct loop current mode or the current is not set to the exact minimum, response code 9 - incorrect current mode or value - is returned.

Table 22

Request	
Byte0-3	External measured current value, unit: mA.
Response	
Byte0-3	Actual measured primary variable current value, unit: mA.

Command 59: The number of response leading characters

This is a data link layer management command that should be used only for asynchronous physical layer links, such as FSK.

This command selects the minimum number of leading characters to be sent before the response packet begins. This number includes the two leading characters included in the message header. The number may be set from 5 to 20.

Table 23

Request	
Byte0	The number of leading characters to be sent in the response message
Response	
Byte0	The number of leading characters to be sent in the response message

Example: Adjusting the loop current zero point

The (4 to 20) mA loop transmits a dynamic primary variable via an analog signal, which requires the loop current value to be uniform between the primary and the slave. The loop current command allows the host to impose a loop current value on the field device and perform a two-point adjustment of the field device loop current

value (corresponding to ZERO and SPAN). The loop current adjustment process is as follows.

1. Through command 40, enter/exit the fixed current mode and set the current to the minimum value of the device, usually 4 mA.

2.Through command 45, adjust the loop current zero point. The device returns the current value of current output after adjustment, which may deviate from the host setting due to rounding.

3.By command 40, enter/exit the fixed current mode and set the current to the maximum value of the device, usually 20 mA.

4.Through command 46, adjust the loop current gain.

5.If you need to set it more accurately, repeat steps 1-4. When the loop current is well calibrated, exit the fixed current mode (set 0 mA) by command 40.

Chapter 8 Technical Parameters

8.1. Technical Parameters

Table 24 Measuring System

Execution Standard	JB/T9248-2015	
Measuring principle	Faraday's law of electromagnetic induction	
Function	Real-time flow rate, flow velocity, mass flow (when the density is constant), real-time measurement and flow accumulation	
Module configuration	Measurement system is made up of signal converter and measurement sensor	
Converter		
Compact Type	IP65	
Remote Type	IP65 for transmitter (IP65/IP68 for sensor)	
Measurement sensor		
Nominal Diameter	DN15-DN1200	
Flange	In line with GB/T9119-2000 standard carbon steel (Optional stainless steel flanges), other standard flange can be customized	
Pressure rating (High pressure can be customized)	DN15 - DN250, PN≤1.6MPa	
	DN300~DN1000, PN≤1.0MPa	
	DN1200~DN2000, PN≤0.6MPa	
Lining Material	Neoprene (CR), Polyurethane (PU) PTFE (F4), PFEP (F46), PFA	
Electrode Material	316L Stainless Steel, Hastelloy C, Hastelloy B, Ti, Ta, Pt	
IP Rate	IP65 for converter, IP68 for sensor	IP65
Medium temperature	Neoprene: -10℃ ~ +60℃ Polyurethane: -10℃ ~ +60℃ PTFE/FEP: -10℃ ~ +120℃ PFA: -10℃ ~ +180℃	Neoprene: -10℃ ~ +60℃ Polyurethane: -10℃ ~ +60℃ PTFE/FEP: -10℃ ~ +120℃ PFA: -10℃ ~ +120℃
Buried depth	Not deeper than 5 meters (only for remote type sensors with IP68 protection)	
Immersion depth	Not deeper than 3 meters (only for remote type sensors with IP68 protection)	
Sensor cable	Suitable only for remote type instruments. The standard cable length is 10 m; flowmeters can be equipped with a cable of optional length up to 100 m.	

Table 25 Communications

Serial communications	RS-485, HART,RS-232
Output	Current (4-20 mA) , pulse , frequency , state switch
Function	Empty pipe recognition, electrode contamination

Table 26 Display User Interface

Graphic display	Monochrome LCD, white backlight; Size: 128*64 pixels
Display function	2 measurement value pictures (measurements, condition, etc)
Language	Chinese/ English/Spanish (Spanish version can be customizable)
Unit	You can configure the menu to select the unit Refer to "6.5 Configuration details" --- "flow units 1-1"
Operating unit	4 Mechanical keys (Compact Type) or 4 touch key (Remote Type)

Table 27 Measurement Accuracy

Max measuring error	Flow meter	Measurement value ±0.5%（Flow speed > 1m/s）; Measurement value ±0.5% ±2mm/s（Flow speed <1m/s）
	BTU meter	2%
Repetitiveness	0.16%	
Temperature sensor measuring range	-20℃~120℃	
Maximum measurement error	±0.1℃(Within the measuring range of temperature sensor)	

Operating Environment Table 28

Temperature	
Environment	-10℃ ~ 55℃ for Compact-Type Flowmeter -10℃ ~ 60℃ for Converter of Remote-Type Flowmeter -10℃ ~ 55℃ for Converter of Remote-Type Flowmeter
Storage	-40℃ ~ 65℃

Electric Conductivity Table 29

Water	Min. 20μS/cm (Actual electric conductivity should be greater than 50μS/cm)
Other	Min. 5μS/cm (Actual electric conductivity should be greater than 50μS/cm)

Material Table 30

Sensor housing	Carbon steel,stainless steel 304, stainless steel 316L
Converter	Standard painted die cast aluminum
Cable gland	(M20*1,5.) Polyamide
Cable material	Polyurethane

Electrical Connections Table 31

Power supply	85-245 VAC，50/60 Hz，22-26 VDC
Power consumption	Max 15W
Insulation resistance	≥20MΩ
Signal cable	Apply only to remote type
Shielded cable	Signal section，wire: 0.5mm2 Cu /AWG20

Output Table 32

Current output		
Function	Measurement of volume and quality (in the case of constant density)	
Setting	Scope	(4~20)mA
	Max	20mA
	Min	4mA
Internal voltage	24VDC	
Loading	≤750Ω	
Pulse and frequency output		
Function	Set up Pulse and frequency output	
Pulse output	Basis	Output pulse width: 10ms ~200ms Duty cycle: 50% (Pulse frequency ≥5Hz) Fmax ≤ 5000 cp/s
	Setting	0.001L ~ 1m^3
Frequency	Max	Fmax ≤ 5000Hz
	Setting	0-5000Hz
Passive	U_{Outer} ≤ 36VDC	
Active	$U_{Internal}$ ≤ 24VDC	
	I≤ 4.52 mA	
Status output		
Function	Output as alarm	
Passive	U_{Outer}≤ 36VDC	
Active	$U_{External}$ ≤ 24VDC	
	I≤ 4.52mA	

8.2. Electrode selection and specification

Corrosion Resistance of Electrode Material (Only for Reference)

Table 33

Material	Corrosion Resistance
Molybdenum-containing stainless steel (0Cr18N12Mo2Ti)	Applicable: domestic water, industrial water, sewage, weak acid-base salt solutions, normal temperature concentrated nitric acid. Not applicable: hydrofluoric acid, hydrochloric acid, chlorine, bromine, iodine and other media.
Hastelloy B	Applicable: non-oxidizing acids, such as hydrochloric acid and hydrofluoric acid of certain concentration, alkaline solutions with a concentration of no less than 70% sodium hydroxide. Not applicable: nitric acid and other oxidizing acids.
Hastelloy C	Applicable: oxidizing acids, such as nitric acid, mixed acid, or sulfuric acid mixed corrosive media, corrosive environments with oxidizing salts or other oxidizing agents such as hypochlorite solution above room temperature, seawater. Not applicable: reducing acids such as hydrochloric acid and chlorides.
Ti	Applicable: chloride, hypochlorite, seawater, oxidizing acid. Not applicable: reducing acids such as hydrochloric acid, sulfuric acid, etc.
Ta	Applicable: most acids, such as concentrated hydrochloric acid, nitric acid and sulfuric acid, including hydrochloric acid with boiling point, nitric acid and sulfuric acid below 175℃. Not applicable: alkalis, hydrofluoric acid, sulfur trioxide.
Pt	Applicable: various acids (excluding aqua regia), alkalis and salts.

Table 34

Lining Selection				
Type	Advantages and weaknesses	Maximum process temperature	Mediums	Applicable diameters range
Neoprene (CR)	Average abrasiveness, good for acids, alkalis, and salts solutions.	<60℃	Domestic water, sea water, industrial water	≥DN50
Polyurethane (PU)	Has very good antiabrasive quality; not good for acids, alkali solutions	<60℃	Slurry such as mine slurry, pulp and paper	≤DN600
PTFE (F4)	Stable chemical property, proof against the corrosion of boiling hydrochloric acid, sulphuric acid, nitric acid and aqua regia, concentrated alkalis	<120℃	Strong corrosive acids, alkali solution	DN15-DN1200
FEP (F46)	Same chemical properties as F4, but with better tensile strength and pressure resistance.	<120℃	Corrosive acids, alkali, and salts solutions	DN15-DN1200
PFA (PFA)	Same chemical properties as F46, but with better tensile strength and pressure resistance.	<120℃ (Compact） <180℃ (Remote)	Corrosive acids, alkali, and salts solutions	≤DN500

Notes: Due to a wide variety of media, their corrosive substance is affected by complex factors such as temperature, concentration and tassel.

So this table is only for reference. Users may make their ownchoices based on actual situation. You may refer to corrosion prevention manual for general media. But for media with complex compositions like mixed acid, you may need to conduct corrosion tests for materials to be selected.

8.3. Flowmeter

Table 35

Nominal Diameter (mm)	Flow range (m^3/h)		
	The optional lower range value can be selected from the following array	Standard	The optional upper range value can be selected from the following array
15	0.0636-0.6	0.8-3.0	4.0-7.632
20	0.131-1.0	1.2-5.0	6.0-13.6
25	0.176-1.6	2.0-8.0	10-21
32	0.2895-2.5	3.0-12	16-35
40	0.4524-4.0	5.0-20	25-45
50	0.707-6.0	8.0-40	50-85
65	1.195-10	12-60	80-143
80	1.81-16	20-120	160-217
100	2.83-25	30-160	200-339
125	4.42-40	50-250	300-530
150	6.36-60	80-400	500-763
200	11.3-100	120-600	800-1357
250	17.7-160	200-800	1000-2120
300	25.45-250	300-1200	1600-3054
350	34.6-300	400-1600	2000-4157
400	45.2-400	500-2000	2500-5429
450	57.3-500	600-2500	3000-6871
500	70.7-600	800-3000	4000-8482
600	102-800	1000-4000	5000-12216
700	139-1200	1600-5000	6000-16620
800	181-1600	2000-6000	8000-21720
900	229-1600	2000-8000	10000-27480
1000	283-2000	2500-10000	12000-33924
1200	407-2500	3000-12000	16000-48833

Reduction formula: (Flow)Q = (flow velocity) V× π ×(DN/2)^2,Unit: m/s and m^3/h

8.4. Flow and Velocity Parallel Table for Electromagnetic Flowmeter

Table 37

DN (mm) \ Velocity (m/s) / Flow (m^3/h)	0.1	0.2	0.4	0.5	1	10	12	15
DN10	0.02827	0.0565	0.1131	0.1414	0.2827	2.827	3.39	4.24
DN15	0.0636	0.127	0.25	0.318	0.636	6.362	7.632	9.54
DN20	0.131	0.226	0.45	0.566	1.131	11.31	13.572	16.965
DN25	0.176	0.35	0.71	0.8835	1.767	17.67	21.204	26.505
DN32	0.2895	0.58	1.16	1.448	2.895	28.95	34.74	43.425
DN40	0.4525	0.90	1.81	2.62	4.524	45.24	54.208	67.86
DN50	0.707	1.414	2.83	3.535	7.069	70.69	84.83	106
DN65	1.195	2.39	4.78	5.973	11.946	119.5	143.35	179.2
DN80	1.81	3.62	7.24	9.048	18.1	181	217.2	271.5
DN100	2.83	5.65	11.31	14.14	28.27	282.7	339.24	424.05
DN125	4.42	8.84	17.67	22.09	44.18	441.8	530.16	662.7
DN150	6.36	12.7	25.5	31.81	63.62	636.2	763.44	954.3
DN200	11.3	22.6	45.2	45.55	113.1	1131	1357.2	1696.5
DN250	17.7	35.4	70.7	88.36	176.7	1767	2110.4	2650.5
DN300	25.45	51	102	127.24	254.5	2545	3054	3878.5
DN350	34.64	69	139	173.2	356.4	3464	4156.8	5196
DN400	45.24	90	181	226.2	452.4	4524	5428.8	6786
DN450	57.3	114	229	286.3	572.6	5726	6871.2	8589
DN500	70.7	141	283	353.4	706.9	7069	8484.8	10603.5
DN600	102	203	407	508.9	1018	10179	12216	15270
DN700	139	277	554	692.7	1385	13854	16620	20775
DN800	181.0	362	723	905	1810	18096	21720	27150
DN900	229.0	458	916	1145	2290	22902	27480	34350
DN1000	283	565	1131	1414	2827	28274	33924	42405
DN1200	407	814	1628	2034.7	4069.4	40694	48832.8	61041
DN1400	554	1108	2216	2769.5	5539.4	55390	66468	83085
DN1600	723	1447	2894	3617.3	7234.6	72346	86815.2	108519

8.5. Accuracy

Reference condition

(1) Medium: water

(2) Temperature: 20℃

(3) Pressure: 0.1MPa

(4) Front straight conduit: ⩾10DN, Rear straight conduit: ⩾5DN

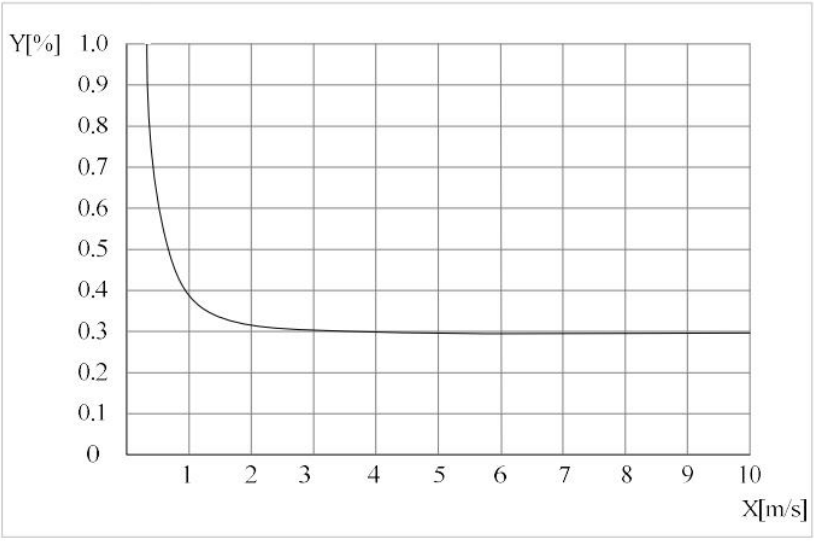

Figure 48

① X[m/s]: Flow rate

② Y[%]: Actual measured value deviation（mV）

Chapter 9 Plug-in type electromagnetic flowmeter series

9.1. The functional use and scope of application of the product

The plug-in electromagnetic flow sensor (sensor for short) and electromagnetic flow converter (converter for short) are matched to form a plug-in electromagnetic flow meter (flow meter for short) for measuring the volume flow of various conductive liquids in the conveying pipeline.

The sensor has the following characteristics

(1) There are no moving parts in the sensor, which is simple in structure and reliable in operation.

(2) The plug-in structure can be easily installed and disassembled without stopping water under low pressure or under pressure. Therefore, it is very suitable for the fluid measurement of existing pipelines and is convenient for the maintenance and repair of instruments.

(3) The measurement accuracy is not affected by changes in physical parameters such as temperature, pressure, density, viscosity, conductivity (as long as the conductivity is greater than 5) of the measured medium.

(4) The sensor has almost no pressure loss and very low energy loss.

(5) Compared with the ordinary electromagnetic flowmeter, the manufacturing cost and installation cost are lower and is particularly suitable for flow measurement of large and medium diameter pipeline.

(6) Adopt advanced low frequency square wave excitation. Zero stability, strong anti-interference ability and reliable work.

(7) The flow measurement range is large. The full-scale flow rate in the pipeline under test can be arbitrarily set from 1m / s to 10m / s, and the output signal has a linear relationship with the flow rate.

(8) The flowmeter is not limited to 0～10mA(DC) or 4～20mA (DC) standard current output and 1 ~ 5kHz frequency output at the same time.

Because the flowmeter (sensor) has the above-mentioned advantages, it has been widely used in industrial sections such as chemical industry, chemical fiber, metallurgy, chemical fertilizer, paper making, water supply and drainage,

sewage treatment, etc. and in automatic control of the production process.

9.2. Product form and composition

The product type is magnetic insertion. It is connected with the pipeline through a mounting base, a ball valve, a compression nut and a positioning screw. Sensor measurement can be divided into two types of structure: measurement tube type and plane electrode type. The measuring tube type sensor is suitable for measuring the cleaning medium; the planar electrode type is suitable for measuring the liquid flow rate containing other impurities in the medium.

9.3. Main technical specification

(1) Applicable pipe diameter:
DN100～3000mm

(2) Flow rate measurement range:
0~1 to 0~10m/s, the full scale is continuously adjustable in the range of 1~10m/s.

(3) Measurement accuracy:
When the full-scale flow rate is 1 m/s, the accuracy is±1.5%.

(4) Conductivity of the measured medium: > 30μS/cm

(5) Max working pressure: 1.6Mpa

(6) Electrode material:
Molybdenum-containing stainless steel 0Cr118Ni12Mo2Ti, Hastelloy c-276, titanium Ti, and the like.

(7) Measuring tube (measuring head) material: ABS

(8) The highest temperature of the measured medium: ABS60℃

(9) Sensor Ingress protection: IP68, converter ingress protection: IP65.

(10) The maximum transmission distance between the sensor and the converter is 50m (special length can be customized)

(11) Flowmeter output signal: (4~20) mA, load resistance is 0~750Ω
Frequency: 1~5kHz

(12) Connection method: flanged ball valve connection, threaded (screw) ball valve connection.

(13) 15D upstream and 10D downstream of the straight pipe section.

9.4. Structure

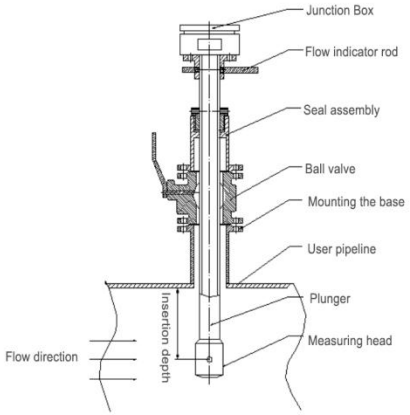

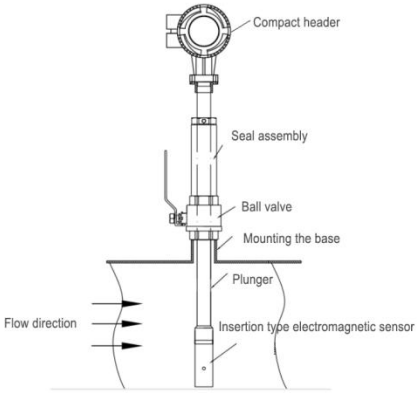

Table 38

Insertion length	
Size	Length
DN≤200	693mm
400≥DN≥250	793mm
1200≥DN＞400	893mm
2000≥DN＞1400	1093mm

The sensor is mainly composed of a measuring head (or measuring tube), an excitation system, an insertion rod, a junction box, a mounting base, and a bee positioning mechanism.

Measuring head (or measuring tube): The measuring head (measuring tube) is located at the particle of the measured flow velocity in the pipeline and is used to detect the flow velocity at this point. The measuring head (or measuring tube) consists of an end or conduit made of insulating material, on which a pair of electrodes is mounted. Except for the electrode tip or the inner wall of the measuring tube, the other parts are insulated from the fluid to be measured.

Excitation system: The excitation system is used to generate a working magnetic

field. It consists of excitation coil and iron core. It is insulated and sealed into the insertion rod.

Insertion rod: made of stainless steel material. The east measuring tube of the measuring head is fixed in the insertion rod. The excitation lead and the electrode lead are sealed with the medium to be tested by the insertion rod and connected to the junction box. The insertion rod is welded with a direction indicator rod to ensure that the working magnetic field, the flow rate and the electrode connection line are perpendicular to each other during installation, and meet the requirements of Faraday's law of electromagnetic induction.

Terminal box: The junction box is located on the top of the sensor. The terminals in the junction box act as a connection between the sensor and the converter.

Mounting base: the mounting base is welded to the pipeline under test and is used to connect with the mounting ball valve and insert the electromagnetic flowmeter sensor.

Sealing mechanism: composed of pressing screw seat, pressing nut, rubber washer and set screw made of stainless steel material. It is used to seal and insert the electromagnetic sensor so that it can withstand a certain working pressure.

9.5. Installation and use

9.5.1. Installation

Selection of installation environment

(1) The equipment with strong phenolic water field, such as large motors and large transformers, should be kept as far away as possible.

(2) There should be no strong vibration in the installation site, and the pipeline should be firmly fixed. The ambient temperature should not change much.

(3) The installation environment should be convenient for installation and maintenance.

Choice of installation location

(1) The installation position must ensure that the pipeline is always filled with the fluid to be measured.

(2) Choose a place where the fluid flow pulse is small. That is, it should be kept away from local resistance parts such as pumps, valves and elbows.

(3) When measuring two-phase (solid, liquid or gas, liquid) fluids, a place that is not easy to cause phase separation should be selected.

(4) Negative pressure should be avoided at the measurement site.

(5) The diameter or circumference of the pipe on the side of the pipe is easy to measure, and the ovality should be small.

9.5.2. Length of straight pipe

The length of the straight pipe section on the upstream side of the sensor installation pipeline should be greater than or equal to 15D, and the downstream side should not be less than 10D. D is the diameter of the pipe under test.

9.5.3. Flow control valves and regulating valves

The flow control valve should be installed on the pipeline under test on the upstream side of the sensor, and the flow regulating valve should be installed on the downstream side of the sensor. When measuring, usually the flow control valve should be fully open.

9.5.4. Welding of mounting base

Before installation, a small hole with a diameter of 50mm should be opened on the pipe under test, the size of which is consistent with the outer diameter of the connecting pipe of the installation base. The welding between the mounting base and the pipe under test is shown in Figure 49.

The technical requirements for welding are as follows:

(1) The axis of the installation base is perpendicular to the axis of the pipe under test.

(2) Flat welding with stainless steel electrodes. After welding, ensure that the flange end face is parallel to the pipe axis, the welding seam is firm, and it can withstand 1.6Mpa pressure without leakage.

9.5.5. Sensor installation

(1) Clean the welding slag and burrs on the mounting base of the tube under test.

(2) Turn off the upstream flow control valve or use low pressure water supply.

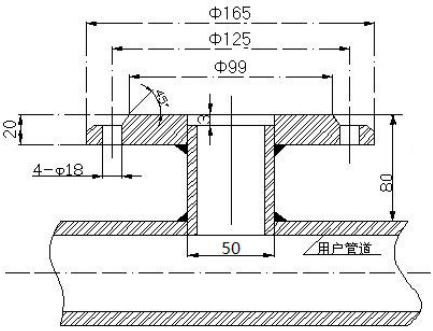

Figure 49 Welding of the mounting base

(3) Determine the insertion depth of the insertion type electromagnetic (the positions of the two electrodes on the insertion type electromagnetic flow sensor in the pipeline).

(4) Install the DN50 ball valve on the mounting base as shown in Figure 49. Note that the long cavity of the ball valve is up. Check whether the ball valve can be fully opened and fully closed. Tighten the compression nut and set screw, and pay attention to the direction mark of the sensor and the direction of the fluid flow.

(5) Determination of the insertion depth of the insertion type electromagnetic flow sensor: For D≤400mm, the insertion depth is: 1/2 times the pipe diameter. For D>400mm, the insertion depth is: 1/4 times the pipe diameter. (The meter coefficients of the two places are different)

9.5.6. Grounding

The flow signal produced by the sensor is very weak, usually on the microvolt or millivolt level. Therefore, preventing the influence of external electrical interference is an important factor in using the flowmeter well. Grounding is a very effective measure to address the effects of electrical interference.

The grounding requirement of the sensor is mainly the grounding of the measured medium. The grounding end of the sensor and the converter is connected with the metal shielding net of the flow signal cable, and is connected with the measured medium through the insertion rod. When the pipeline to be tested is a non-metallic pipeline, in order to ensure good grounding, the grounding terminal of the sensor

can be directly connected to the ground plus a grounding wire. It is required that the grounding resistance should be less than 10Ω.

9.5.7. Adjustment and use

(1) If the flow rate of the measured pipeline is known, the flow range can be set according to the flow rate in the measured pipeline and the range setting method in the installation and operation manual of the converter.

(2) After the preparation work is completed, first open the upstream flow control valve of the sensor, and then slowly open the downstream flow control valve, and observe that the flow rate displayed by the converter should change from small to large. If it shows a negative value, switch off the power and switch the signal lines "SIG1" and "SIG2".

(3) According to the measured flow rate, set the flow range value and the regulator coefficient according to the installation and operation manual of the converter as needed.

(4) If the sensor is installed in the open air or buried in the ground, connect the terminal wire and seal it.

(5) Open the upstream flow control valve of the sensor, and open the downstream flow control valve to discharge the fluid for a few minutes, and then let the gas contained in the fluid be discharged along with it. Close the downstream flow regulating valve and the upstream flow control valve, let the pipeline be filled with fluid, but not flow, and perform zero-adjustment of the instrument according to the method described in the installation and operation manual of the converter.

9.6. Maintenance, Repair and Common Troubleshooting

9.6.1. Maintenance

Sensors generally do not require regular maintenance. However, for the situation where the measured medium is easy to make the surface or inner wall of the electrode and the measuring head (measuring tube) adhere and scale, it must be cleaned regularly. The cleaning cycle depends on the rate of adhesion and fouling. When cleaning the electrode and the measuring head (measuring tube), be careful

not to damage the insulating material and the electrode.

9.6.2. Repair

If the sensor is faulty, it can be determined whether the measurement system of the sensor excitation system is normal according to the inspection method described in 9.6.3. If there is any fault, please contact the factory, and the general user cannot repair it by himself.

When disassembling the sensor, pay attention to closing the ball valve.

9.6.3. Common Troubleshooting Table

Table 39

Phenomenon	Cause	Method
Converter flow is negative	1. The sensor direction indicator rod is opposite to the fluid flow direction 2. There is a reverse connection between SIG1 and SIG2 or EXT1 and EXT- in the sensor junction box	1. Rotate the sensor direction 180° 2. Converter rewired
Converter output overrange	1. The flow meter range value is less than the actual measurement value 2. Fluid does not fill the pipe 3. Exciter coil open circuit	1. Expand the flow meter range 2. Close the small flow control valve 3. Rewire
The output signal fluctuates too much	1. 1. There is gas at the sensor electrode, resulting in poor contact between the electrode and the medium 2. Deposits on the electrodes	1. Exclude the gas in the pipeline 2. Cleaning electrode
The output signal gradually drifts towards zero	1. The sensor enters the water 2. Electrodes are covered	1. Replace the sensor 2. cleaning electrode