Electromagnetic Flowmeter

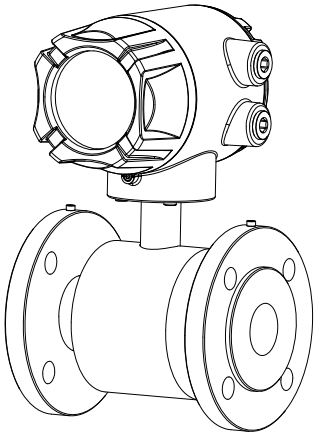

Supmea

Headquarters

5th floor,Building 4,Singapore Hangzhou Science Technology Park,No. 6 street,

Hangzhou Economic Development Area,Hangzhou 310018,China

Singapore

2 Venture Drive #11-30 Vision Exchange Singapore

info@supmea.com

www.supmea.com

Supmea Automation Co.,Ltd.

Preface

- Thank you for purchasing our product.
- This manual is about the various functions of the product, wiring methods, setting methods, operating methods, troubleshooting methods, etc.
- Please read this manual carefully before operation. Use this product correctly to avoid unnecessary losses due to incorrect operation.
- After you finish reading, please keep it in a place where it can be easily accessed at any time for reference during operation.

Note

- Modification of this manual's contents will not be notified as a result of some factors, such as function upgrading.
- We try our best to guarantee that the manual content is accurate. If you find something wrong or incorrect, please contact us.
- The content of this manual is strictly prohibited from being reprinted or copied.
- Please use this product in accordance with the explosion-proof characteristics of this product and comply with the requirements of national and regional laws and regulations, and we are not responsible for any problems and losses caused by improper operation or illegal use.
- Product Model Specification Selection: See specifications.
- For product model selection, please refer to the specification attachment 1- "Explosion-proof Electromagnetic Flowmeter Ordering Code".
- The final interpretation of this manual belongs to our company.

Version

U-SUP-LDG-SUP-A100D-EN3

Safety Precautions

In order to use this product safely, be sure to follow the safety precautions described.

About this manual

- Please submit this manual to the operator for reading.
- Please read the operation manual carefully before applying the instrument. On the precondition of full understanding.
- This manual only describes the functions of the product. The company does not guarantee that the product will be suitable for a particular use by the user.

Precautions for protection, safety, and modification of this product

- To ensure safe use of this product and the systems it controls, please read carefully the operation manual and understand the correct application methods before putting it into operation, to avoid unnecessary losses due to operational mistakes. If the instrument is operated in other ways not described in the manual, the protections that the instrument gives may be destroyed, and the failures and accidents incurred due to the violation of precautions shall not be borne by our company.
- When installing lightning protection devices for this product and its control system, or designing and installing separate safety protection circuits for this product and its control system, it needs to be implemented by other devices.
- If you need to replace parts of the product, please use the model specifications specified by the company.
- This product is not intended for use in systems that are directly related to personal safety. Such as nuclear power equipment, equipment using radioactivity, railway systems, aviation equipment, marine equipment, aviation equipment and medical equipment. If applied, it is the responsibility

of the user to use additional equipment or systems to ensure personal safety.

- Do not modify this product. The following safety signs are used in this manual:


Hazard, if not taken with appropriate precautions, will result in serious personal injury, product damage, or major property damage.


Warning: Pay special attention to the important information linked to the product or a particular part in the operation manual.



- Confirm if the supply voltage is consistent with the rated voltage before operation.
- To prevent electric shock, operational mistakes, good grounding protection must be made.
- Thunder prevention engineering facilities must be well managed: the shared grounding network shall be grounded at the electrical level, shielded, wires shall be located rationally, and SPD surge protectors shall be applied properly.
- Cut off the electric power before making any checks to avoid an electric shock.
- Check the condition of the terminal screws regularly. If it is loose, please tighten it before use.
- It is not allowed to disassemble, process, modify, or repair the product without authorization; otherwise, it may cause abnormal operation, electric shock, or a fire accident.
- Wipe the product with a dry cotton cloth. Do not use alcohol, benzine, or other organic solvents. Prevent all kinds of liquid from splashing on the product. If the product falls into the water, please cut off the power immediately; otherwise, there will be leakage, electric shock, or even a fire accident.
- Please check the grounding protection status regularly. Do not operate

if you think that the protection measures, such as grounding protection and fuses, are not perfect.

- Ventilation holes on the product housing must be kept clear to avoid malfunctions due to high temperatures, abnormal operation, shortened life, and fire.
- Please strictly follow the instructions in this manual; otherwise, the product's protective device may be damaged.



- Do not use the instrument if it is found damaged or deformed upon opening of package.
- Prevent dust, wire ends, iron fines, or other objects from entering the instrument during installation; otherwise, it will cause abnormal movement or failure.
- During operation, to modify the configuration, signal output, startup, stop, and operation safety shall be fully considered. Operational mistakes may lead to failure and even the destruction of the instrument and controlled equipment.
- Each part of the instrument has a certain lifetime, which must be maintained and repaired on a regular basis for long-term use.
- The product shall be scrapped as industrial waste to prevent environmental pollution.
- When not using this product, be sure to turn off the power switch.
- If you find smoke from the product, smell odor, abnormal noise, etc., please turn off the power switch immediately and contact the company in time.

Disclaimer

- The company does not make any guarantees for terms outside the scope of this product warranty.
- This company is not responsible for damage to the instrument or loss of parts or unpredictable damage caused directly or indirectly by improper operation of the user.

Package contents

Serial number	Item Name	Quantity
1	Electromagnetic Flowmeter	1
2	User Manual	1
3	Certificate	1

After opening the box, please confirm the package contents before starting the operation.If you find that the model and quantity are incorrect or there is physical damage to the appearance, please contact us.

Contents

1 Introduction 1
1.1 Introduction 1
1.2 Measuring principle 1
1.3 Features 2
1.4 Reference standard 2
1.5 Technical parameters 3
Accuracy 5
2 Structure and dimensions 7
2.1 Structure 7
2.2 Converter dimensions 9
2.3 Sensor dimensions 9
2.4 Process connection 12
2.5 Materials 12
3 Installation 13
3.1 Installation tips 13
3.2 Storage 13
3.3 Pipeline design 13
3.4 Pipe design 14
3.5 Installation conditions 16
3.6 Mechanical installation 20
4 Electrical connection 23
4.1 Safety tips 23
4.2 Potential equalization 23
4.3 Wiring terminals 24
4.4 Power supply 25
4.5 Output termination 26

4.6 Post-Connection Check 28
5 Operation 29
5.1 Start up 29
5.2 Display and operating elements 29
5.3 Page description 31
5.4 Quick configuration 32
5.5 Detailed configuration 33
5.6 Operating instruction 40
6 Functions 45
6.1 System information 45
6.2 Pulse/Current output 46
6.3 Communication 47
7 Precautions for explosion-proof 50
8 Common troubleshooting 51
Appendix 1 Electrode selection and specification 52
Appendix 2: Flow and velocity parallel table 53

1 Introduction

1.1 Introduction

The electromagnetic flowmeter is designed based on the Faraday electromagnetic induction principle and used to measure the instantaneous flow rate of conductive liquids in enclosed pipelines in flammable and explosive environments. During on-site monitoring and display, standard current signals, pulse signals, and RS485 digital signals can be output for recording, adjustment, and control, achieving automatic detection and control. It can be widely used in industries such as tap water, chemical industry, coal, environmental protection, light textile, metallurgy, papermaking, etc.

1.2 Measuring principle

The operating principle of electromagnetic flowmeter is based on Faraday's law of electromagnetic induction. The two electromagnetic coils at the upper and lower ends as shown in Figure 3 generate a constant or alternating magnetic field. When the conductive medium flows through the electromagnetic flowmeter, the induced electromotive force can be detected between the left and right electrodes on the wall of the flowmeter tube. The magnitude of the induced electromotive force is proportional to the electrically conductive medium flow rate, the magnetic induction density of the magnetic field, and the width of the conductor (the inner diameter of the flowmeter measuring tube), and the flow rate of the medium can be obtained by calculation. The induced electromotive force equation is as follows:

$$E=K\times B\times V\times D$$

Where: E－Induced electromotive force

K－Meter constant

B－Magnetic induction density

V－Average flow speed in cross-section of measuring tube

D－Inner diameter of measuring tube

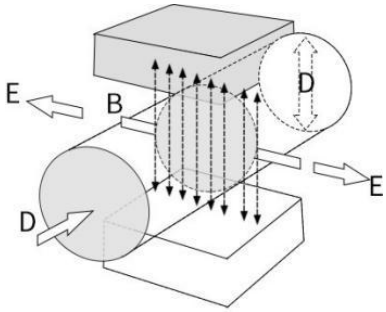

Fig.1

When measuring the flow, the fluid flows through a magnetic field that is perpendicular to the flow direction. The flow of conductive fluid induces a potential proportional to the average flow velocity, thus requiring the conductivity of the measured flowing liquid to be higher than the minimum conductivity. The induced voltage signal is detected by two electrodes and transmitted to the converter via a cable. After a series of analog and digital signal processing, the accumulated flow and real-time flow are displayed on the display of the converter.

1.3 Features

- Passed various universal explosion-proof (Ex) certifications.
- Reliable measurement, high accuracy, and good stability.
- Integrated structure, no moving parts, easy to install, maintenance-free.
- RS485 communication interface - standard Modbus RTU protocol.
- Adopting advanced low-frequency square wave excitation, zero point stability, strong anti-interference ability, and reliable operation.
- It is not affected by the direction of the fluid and can be accurately measuredin both directions.
- Touch the button, no need to open the lid.
- The orientation of the header/display interface can be adjusted for easy reading.
- Supporting five languages and free switching: Chinese, English, Korean, Russian and Spanish.

1.4 Reference standard

The reference standards for this product are JB/T 9248-2015 Electromagnetic Flowmeter and Q/330114 HZMY 001 "Electromagnetic Flowmeter."

1.5 Technical parameters

Table 1 Technical parameters

Input			
Measured variable	Direct measured variables: Flow velocity Calculated measured variables: Volume flow, mass flow.		
Velocity of flow	Typically Velocity of flow: 0.5m/s~5m/s		
Nominal diameter	DN15~DN300		
Flow range	Nominal diameter	Min value (m^3/h)	Max value (m^3/h)
	DN15	0.32	3.2
	DN20	0.56	5.6
	DN25	0.88	8.8
	DN32	1.4	14
	DN40	2.3	23
	DN50	3.5	35
	DN65	6	60
	DN80	9	90
	DN100	14	140
	DN125	22	220
	DN150	32	320
	DN200	56	560
	DN250	88	880
	DN300	127	1270
Range ratio	10:1		
Output			
Current output	Function	Measurement of volume and quality (in the case of constant density)	
	Setting	Scope	(4~20)mA

		Max	20mA
		Min	4mA
	Internal voltage	24VDC	
	Loading	≤750Ω	
Pulse output	Function	Set up Pulse output	
	Pulse output	Basis	Fmax ≤ 5000 cp/s Output pulse width: 0.1ms ~2000ms (This value is lower than the maximum duty cycle, with a maximum duty cycle of 1:1 F_{max} ≤ 5000 cp/s
		Pulse coefficient	0.001~100000/unit
	Passive	U_{Outer} ≤ 30VDC	
	Active	$U_{Internal}$ ≤ 24VDC	
		I≤ 4.52mA	
Communications	RS485, MODBUS-RTU, Hart (optional)		
Power supply			
Supply voltage	100VAC~230VAC，50/60Hz； 20VDC~28VDC		
Power consumption	≤15W		
Terminals	Screw type terminal block, maximum wire diameter 2.5mm^2		
Cable entries	M20*1.5 or NPT1/2		
Performance characteristics			
Reference operating conditions	Medium: water Temperature: 20℃ Pressure: 0.1MPa Installation requirements: Inlet run≥10DN, Outlet run≥5DN		

Accuracy	Measurement value±0.5%(Flow velocity 0.5m/s~5m/s)
Repetitiveness	0.16%
Maximum measured error	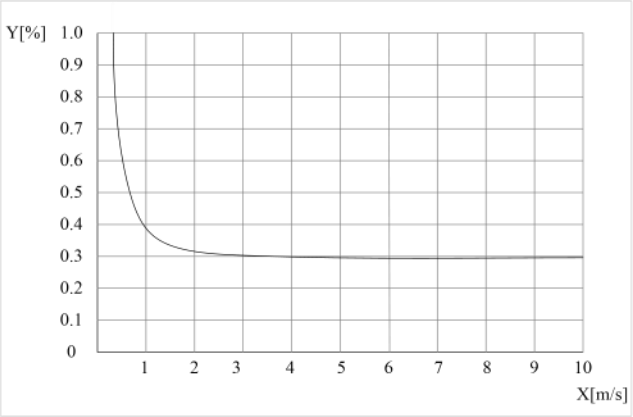 ①X[m/s]: Flow Velocity ②Y[%]: Actual measured value deviation
Process	
Medium temperature range	PU liner: -10℃~60℃ CR liner: -10℃~70℃ PTFE/F46 liner: -10℃~120℃
Pressure rating (High pressure can be customized)	DN15~DN250：PN<1.6MPa DN300: PN<1.0MPa Not: (If there's any difference between the selected specifications and the actual product, please refer to the nameplate. High-pressure version can be customized as needed.)
Conductivity	≥50μS/cm
Environment	
Ambient temperature	-10℃~55℃

<table>
<tr><td>Storage temperature</td><td colspan="4">-20℃~55℃</td></tr>
<tr><td>Ingress protection</td><td colspan="4">IP65</td></tr>
<tr><td colspan="5">Explosion-proof parameters</td></tr>
<tr><td rowspan="2">Ex symbol</td><td colspan="4">Ex db ib IIC T6...T4 Gb</td></tr>
<tr><td colspan="4">Note: The product is a flameproof intrinsic safety composite explosion-proof type. The product header is designed with an explosion-proof structure, the sensor measuring electrode part is designed with intrinsic safety, and the intrinsic safety circuit is an internal circuit with no external output.</td></tr>
<tr><td rowspan="6">Temp group</td><td rowspan="2">Lining material</td><td colspan="3">Medium temperature [℃]</td></tr>
<tr><td>T6[85℃]</td><td>T5[100℃]</td><td>T4[135℃]</td></tr>
<tr><td>PU</td><td>-10~60</td><td>-10~60</td><td>-10~60</td></tr>
<tr><td>CR</td><td>-10~60</td><td>-10~70</td><td>-10~70</td></tr>
<tr><td>PTFE, F46</td><td>-10~60</td><td>-10~75</td><td>-10~120</td></tr>
<tr><td colspan="4">Note: During the installation and use of the product, corresponding measures should be taken to ensure that the temperature at the neck of the sensor does not exceed 75℃.</td></tr>
<tr><td>Cable entry requirements</td><td colspan="4">During product installation and use, it is necessary to select or prepare cable entry devices that comply with the requirements of GB/T 3836.1-2021 and GB/T 3836.2-2021 standards and bear the explosion-proof marking Ex db IIC Gb.</td></tr>
</table>

2 Structure and dimensions

2.1 Structure

The electromagnetic flow meters mainly consist of two parts: a sensor and a converter. The integrated electromagnetic flow sensor and converter are integrated in one unit.

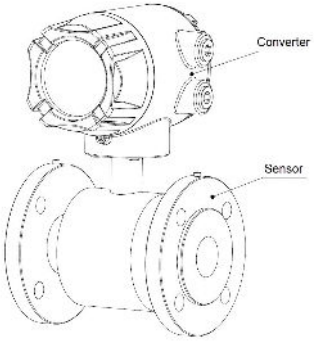

Fig.2 Integrated electromagnetic flowmeter structure

The sensor includes a flange, a lining, an electrode, a measuring tube, an excitation coil, and a sensor casing etc; the converter includes an internal circuit board and a converter casing.

The electromagnetic flowmeter mainly consisted of the following parts, see Fig.3.

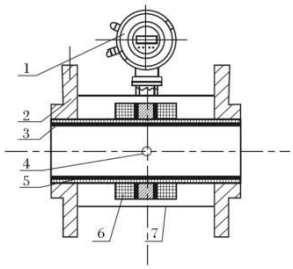

1-Converter; 2-Flange;

3-Insulation lining; 4-Electrode;

5-Measuring tube; 6-Excitation coil;

Fig.3

The electromagnetic flowmeter mainly consists of a sensor and a converter. The sensor includes a flange, a lining, an electrode, a measuring tube, an excitation coil, and a sensor casing etc; the converter includes an internal circuit board and a

converter casing.

(1) Converter: Provide stable excitation current for the sensor, meanwhile amplify the induced electromotive force obtained by the sensor and convert it to standard electrical signals or frequency signals; at the same time, it displays real-time flow and parameters for displaying, controlling and adjusting thereof.

(2) Flange: for connecting process piping.

(3) Lining: Refer to a complete layer of electrically insulating corrosion-resistant material located at the inner side of the measuring tube and flange sealing surface.

(4) Electrode: A pair of electrodes is installed on the wall of the measuring tube, which is perpendicular to the magnetic line, to detect the flow signal. The material of electrode can be selected according to the corrosion performance of the measured medium. It is also equipped with 1-2 grounding electrodes for grounding and anti-interference of flow signal measurement.

(5) Measuring tube: The measured medium flows through the measuring tube. It is made by welding non-magnetic stainless steel and flange, and the inner side is equipped with insulation lining.

(6) Excitation coil: A group of coils is arranged on the upper and lower side of external side of the measuring tube respectively to generate a working magnetic field.

(7) Casing: Protect and seal the meter.

2.2 Converter dimensions

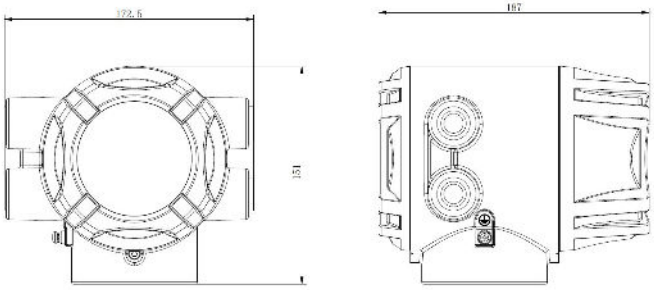

Fig.4 Converter dimensions (Unit: mm)

2.3 Sensor dimensions

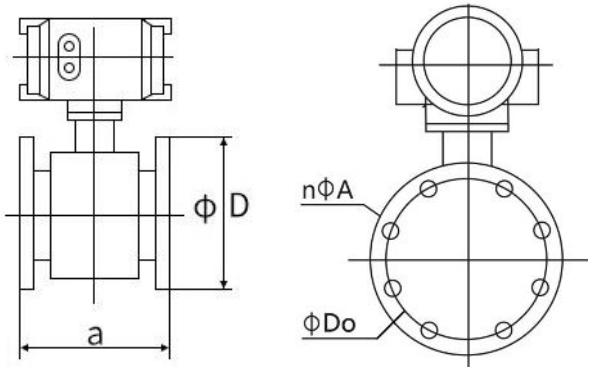

Fig.5 Sensor appearance diagram

Table 2 Sensor dimensions (HG/T 20592 flange)

DN	a	D	Do	n*A	PN
15	200	95	65	4*14	1.6MPa
20	200	105	75	4*14	1.6MPa
25	200	115	85	4*14	1.6MPa
32	200	140	100	4*18	1.6MPa

DN	a	D	Do	n*A	PN
40	200	150	110	4*18	1.6MPa
50	200	165	125	4*18	1.6MPa
65	200	185	145	4*18	1.6MPa
80	200	200	160	8*18	1.6MPa
100	250	220	180	8*18	1.6MPa
125	250	250	210	8*18	1.6MPa
150	300	285	240	8*22	1.6MPa
200	350	340	295	12*22	1.6MPa
250	450	405	355	12*26	1.6MPa
300	500	445	400	12*22	1.0MPa

Table 3 Sensor Dimension (JB/T 81 flange connection)

Unit in mm

DN	a	D	Do	n*A	PN
10	200	90	60	4*14	1.6MPa
15	200	95	65	4*14	1.6MPa
20	200	105	75	4*14	1.6MPa
25	200	115	85	4*14	1.6MPa
32	200	135	100	4*18	1.6MPa
40	200	145	110	4*18	1.6MPa
50	200	160	125	4*18	1.6MPa
65	200	180	145	4*18	1.6MPa
80	200	195	160	8*18	1.6MPa
100	250	215	180	8*18	1.6MPa
125	250	245	210	8*18	1.6MPa

DN	a	D	Do	n*A	PN
150	300	280	240	8*23	1.6MPa
200	350	335	295	12*23	1.6MPa
250	450	405	355	12*25	1.6MPa
300	500	440	400	12*23	1.0MPa

Table 4 Sensor Dimension (JB/T 81 flange connection)

Unit in mm

DN	a	D	Do	n*A	PN
10	200	90	60	4*14	1.6MPa
15	200	95	65	4*14	1.6MPa
20	200	105	75	4*16	1.6MPa
25	200	115	85	4*16	1.6MPa
32	200	140	100	4*18	1.6MPa
40	200	150	110	4*18	1.6MPa
50	200	165	125	4*20	1.6MPa
65	200	185	145	8*20	1.6MPa
80	200	200	160	8*20	1.6MPa
100	250	220	180	8*22	1.6MPa
125	250	250	210	8*22	1.6MPa
150	300	285	240	8*24	1.6MPa
200	350	340	295	12*26	1.6MPa
250	450	405	355	12*29	1.6MPa
300	500	445	400	12*26	1.0MPa

2.4 Process connection

Flange: In line with HG/T 20592 (Optional stainless steel flanges), GB/T 9124-2010 standard for steel pipe flanges, or JB/T 81, other standard flanges can be customized.

2.5 Materials

Converter housing: standard die-cast aluminum
Sensor housing: Carbon steel (optional stainless steel)
Lining: CR, PU, PTFE , F46
Sensor: Optional stainless steel 316L, Hastelloy (HB and HC), titanium, tantalum, platinum iridium alloy.

3 Installation

3.1 Installation tips

Note!

Please check whether the boxes are damaged or not, and whether they have been handled roughly or not. Please report the damage to the courier service and the manufacturer.

Note!

Please check the packing list to make sure the batch of goods that you have received is complete.

Note!

Please check the instrument nameplate and confirm whether the delivered contents are consistent with your order. Check whether the power supply indicated on the nameplate is correct. If not
Correct, please contact the manufacturer.

Note!

The installation diagram is for reference only; please refer to the actual product.

3.2 Storage

(1) The instrument shall be stored in a dry and clean place.
(2) Avoid exposure to direct sunlight for long.
(3) The instrument shall be stored in the original package.

3.3 Pipeline design

The following items shall be considered when the pipes are designed.

(1) Leave enough space on the side.
(2) Do not make the electromagnetic flowmeter subject to violent vibration.

3.4 Pipe design

(1) Location

① The electromagnetic flowmeter shall be installed in a dry and ventilated place. Places that could be flooded should be avoided.

② The electromagnetic flowmeter shall be kept away from the sunshine and rain. When it is installed outdoors, it shall be equipped with facilities against sunshine and rain.

③ The electromagnetic flowmeter shall not be installed in places with large temperature variations, and avoid high temperature radiation from the equipment. If it must be installed therein, heat insulation and ventilation measures shall be taken.

④ The electromagnetic flowmeter shall not be installed in an environment containing corrosive gases. If it must be installed therein, ventilation and anti-corrosion measures shall be taken.

⑤ The electromagnetic flowmeter shall be installed to avoid as much strong vibration as possible, such as violent pipe vibration. In this case, brackets for fixing pipes on both sides of the electromagnetic flowmeter shall be provided.

(2) Avoid interference with the magnetic field.

Do not install electromagnetic flowmeters near motors, transformers, or other power sources that are prone to cause electromagnetic interference, near the frequency converter, or obtain power from the power distribution cabinet of the frequency converter to avoid interference.

(3) Length of inlet and outlet runs

In order to ensure the measurement accuracy of the flowmeter, it is recommended to ensure that the length of inlet runs of the sensor shall be at least 10 times of pipe diameter (10D), and the length of outlet runs be at least 5 times of pipe diameter (5D)

(4) Maintenance space

For the convenience of installation and maintenance, enough installation space shall be reserved around the electromagnetic flowmeter.

(5) For pipes that do not allow flow disruption in the process

When installing the electromagnetic flowmeter, bypass pipes and cleaning ports shall be added. As shown in Fig.7, these devices can ensure the continuous operation of the equipment system when the flowmeter is out of service.

(6) Support of electromagnetic flowmeter

Do not install the electromagnetic flowmeter on a free-vibrating pipe without any support. Instead, a mounting base shall be used to secure the measuring tube. When the electromagnetic flowmeter is required to be installed underground, the pipes at both inlet and outlet ends shall be provided with support items, and a metal protection plate shall be installed above the flowmeter.

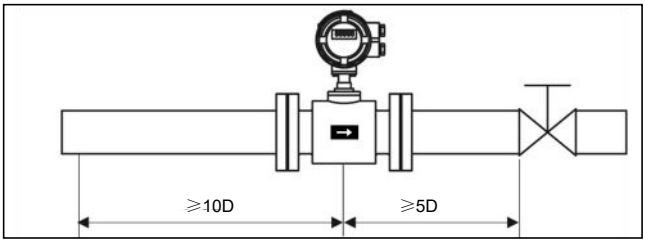

Fig.6

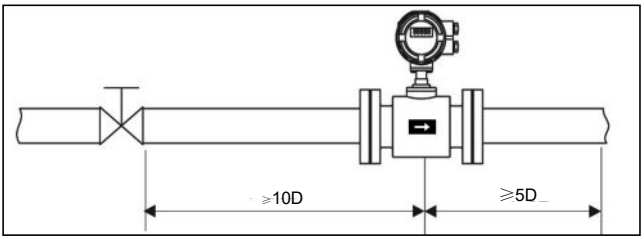

Fig.7

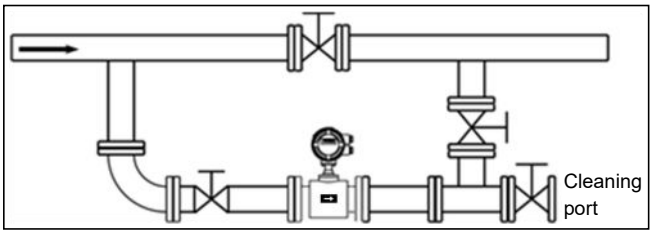

Fig.8

3.5 Installation conditions

(1) Flow direction

The flowmeter can be set to automatically detect the positive and negative flow direction. The flow direction arrow on the sensor casing indicates the positive flow direction specified by the manufacturer. Generally, when installing the meter, the user shall make the flow arrow consistent with the on-site process flow.

Fig.8 shows the preferred location for installing the electromagnetic flowmeter.

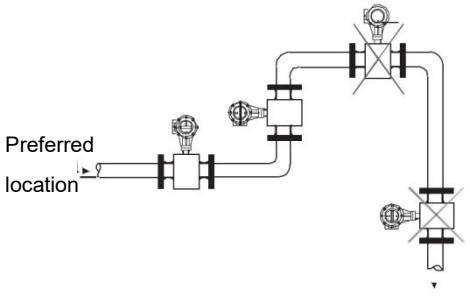

The pipe is routed to the highest point (Bubble accumulation in the measuring tube is likely to cause produce measurement errors!)

Make sure the pipeline is always full.

Fig.9

(2) Installation direction of electromagnetic flowmeter and sensor electrodes

The sensor allows horizontal and vertical installation. When it's installed horizontally, the electrode shall be horizontally placed such that bubbles will not be adsorbed near the electrode in case the medium contains bubbles or precipitates. Otherwise, this would cause converter signals to open and zero drift due to the fact that deposits are not covered by the electrode.

(3) Liquids shall always be filled into pipes.

Pipes shall be arranged to ensure that the electromagnetic flowmeter measuring tube is always filled with liquids.

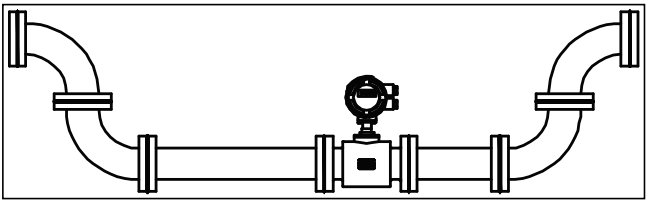

Fig.10

In case of liquids or suspensions containing solid particles, it is recommended to install electromagnetic flowmeters vertically. For one thing, the phase separation of the measured medium can be prevented; for another, the sensor lining is worn evenly. In addition, impurities will not precipitate at the bottom of the measuring tube.

It shall be guaranteed that liquids flow from bottom to top to ensure that the sensor measuring tube is always filled with medium.

(4) The electromagnetic flowmeter cannot be installed on the suction side of the pump.

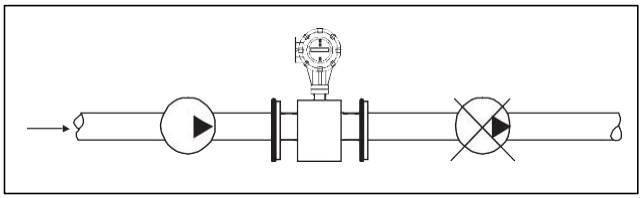

Fig.11

(5) **For long pipelines, control valves are generally installed on downstream of the electromagnetic flowmeter.**

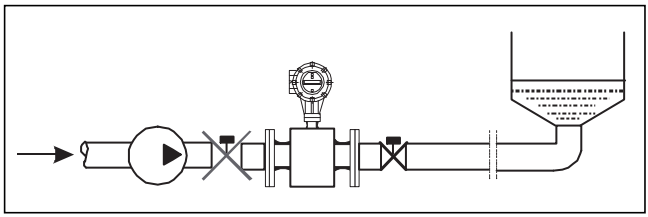

Fig.12

(6) For pipes with open discharges, the electromagnetic flowmeter shall be installed at the bottom section (lower part of the pipe).

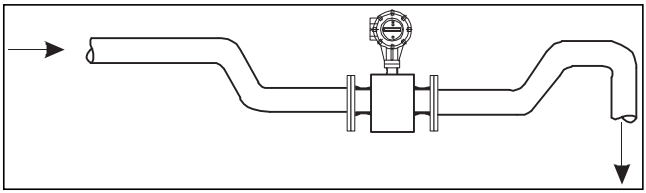

Fig.13

(7) For places where the fall head of pipes is over 5 m, the air valve shall be installed on downstream of the electromagnetic flowmeter.

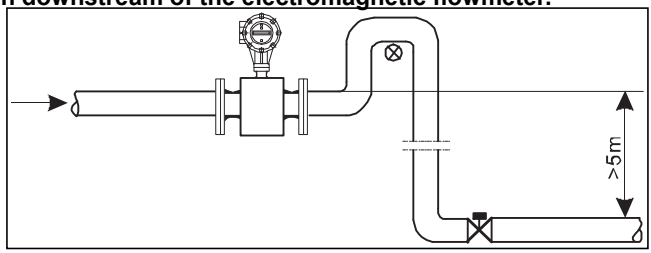

Fig.14

(8) Measurement errors caused by the ingress of foreign gas and damage to the lining caused by vacuum should be avoided.

(9) No bubbles shall be observed in the pipes.

Pipes shall be designed to prevent the air bubbles in the fluids from accumulating in the measurement pipe of a sensor. If a valve exists near the flowmeter, try to

mount the flowmeter on the valve's upstream side to prevent a decrease in pressure inside the pipe, possibly, consequently avoiding the possibility of air bubbles.

Ensure that no gas can be separated from the liquid.

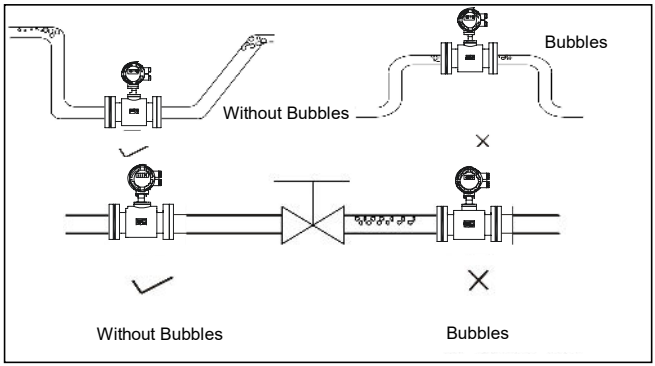

Fig.15

(10) Liquid conductivity

It's not allowed to install the electromagnetic flowmeter at a place where the liquid conductivity is extremely uneven. Injection of chemicals from the upstream of the meter can easily result in uneven liquid conductivity, which can cause serious interference to the meter flow indication. In this case, it is recommended to inject chemicals from the downstream of the meter; if chemicals must be injected from the upstream of the meter, it must be ensured that the straight pipe section on the upstream at least has 30 times of pipe diameter to ensure adequate mixing of liquids.

(11) Grounding

As the voltage of the induced signal of the electromagnetic flowmeter is small, it's more prone to being affected by noise or other electromagnetic signals. This is why the electromagnetic flowmeter needs to be grounded on many occasions. This functions to form an internal space for shielding external interference through the grounding of the flowmeter casing, thereby improving measurement accuracy.

3.6 Mechanical installation

3.6.1. Installation of a flowmeter pipeline

(1) Prior to installation, the pipeline shall be calibrated to ensure that the diameter of the meter has good coaxiality with the user's pipeline. For sensors with a nominal diameter of no more than 50mm, the protrusion of their axis shall not exceed 1.5 mm; for sensors with a nominal diameter of 65~300 mm, it shall not exceed 2mm, and for sensors with a nominal diameter of no less than 350 mm, it shall not exceed 4 mm.

(2) In general, foreign particles (such as welding slag) may exist in newly installed pipelines. Before the flowmeter is installed, wash away the debris. It not only prevents the lining from being damaged but also measuremensurement errors caused by foreign particles which pass through the measuring tube during measurement.

3.6.2. Precautions

Operating introduction:

(1) Take care to avoid damage to the meter when you are unpacking. It is suggested not to unpack the box before transporting it to the installation site to avoid damage of the meter. It's prohibited to use a stick or rope to lead through the measuring tube of the sensor. Instead, follow the correct lifting as shown in the figure below.

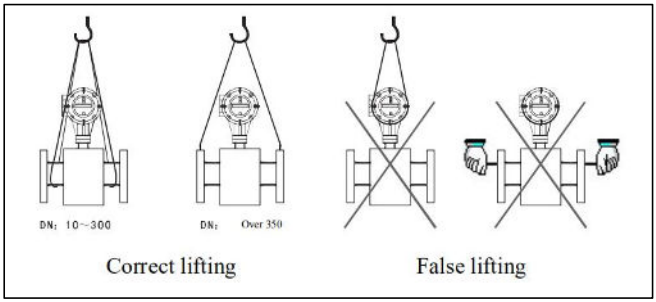

Fig.16

(2) Avoid vibration

Avoid heavy falling or pressing, especially the flange surface which cannot be

stressed (otherwise, the lining may be damaged to disable the operation of the meter).

(3) Protection of the flange surface

After unpacking, pay attention to protect the flange. Do not place it on the unpadded floor or other uneven boards.

(4) No operation for a long duration

After the instrument is installed, it shall be ensured that the meter is not checked for a long duration. If yes, please take the following measures:

A. Check the tightness of the covers and the wiring terminals to ensure that no moisture or water enters the meter.

B. Conduct regular inspections. Check against the measures mentioned above and the terminal box at least once a year. In the event of water entry into the meter (eg, after heavy rain, etc.), the meter shall be inspected immediately.

3.6.3. Installation of the flowmeter

(1) Installation direction

The flow direction of the measured fluid shall be consistent with the flow direction mark indicated on the flowmeter.

(2) Seal gaskets installed between flanges shall have good corrosion resistance and shall not protrude into the interior of the pipe.

(3) When welding or flame cutting is performed adjacent to the sensor pipe, isolation measures shall be taken to prevent the lining from being deformed due to heat.

(4) If it is installed in a well or immersed in water, apply sealant on the terminal box of the sensor after the system is installed and debugged.

(5) When the flowmeter is installed on the field, use bolts to connect the flange on the sensor to that on the pipe. Bolts, nuts, and their threads for securing meters shall be complete and free of damage and well lubricated. Use them with suitable flat washers and spring washers. A torque wrench shall be used to tighten the bolts

according to the flange size and torque. Regularly tighten the bolts during daily use to prevent looseness of the bolts.

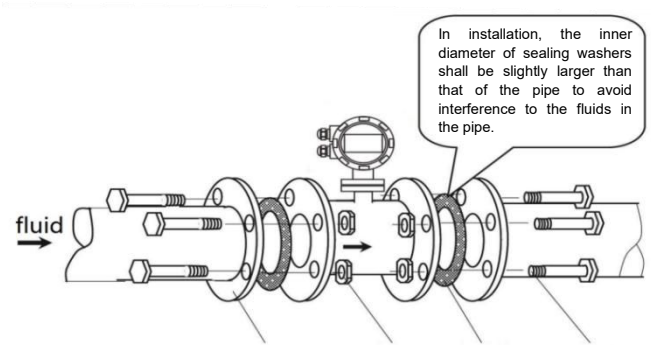

Fig.17

4 Electrical connection

4.1 Safety tips



Danger!

Only when the power is switched off, can we do all the work on electrical connections. Please pay all attention to the power supply on the nameplate!



Danger!

Please observe national installation regulations.



Warning!

Please strictly observe local occupational health and safety regulations. Only those who have been properly trained are allowed to operate on the electrical equipment.



Tips!

Please check the nameplate of the equipment, and confirm whether the delivered contents are consistent with your order, and check whether the voltage indicated on the nameplate is
correct. Otherwise, please contact the manufacturer or supplier.

4.2 Potential equalization

4.2.1. Sensor's grounding



Danger!

No potential difference is allowed between the measuring sensor and casing or protective earth of the converter. The electromagnetic flowmeter must be grounded separately during operation. If it is grounded with other instruments or electrical devices, the leakage current may cause serial-mode interference to the measurement signal, or in a serious case, the electromagnetic flowmeter cannot work.

(1) The measurement sensor must be correctly grounded.

(2) The grounding conductor shall not transmit any interference voltage.

(3) It is not allowed to connect other electrical equipment to the grounding conductor at the same time.

4.2.2. Converter's grounding

The converter is equipped with grounding screws on both the inner and outer casing. During installation, ensure that it is securely grounded with a dedicated grounding wire.

Grounding requirements: the cross-sectional area of the grounding cable should be Greater than 4mm^2, and the grounding resistance should be less than 4 Ω .

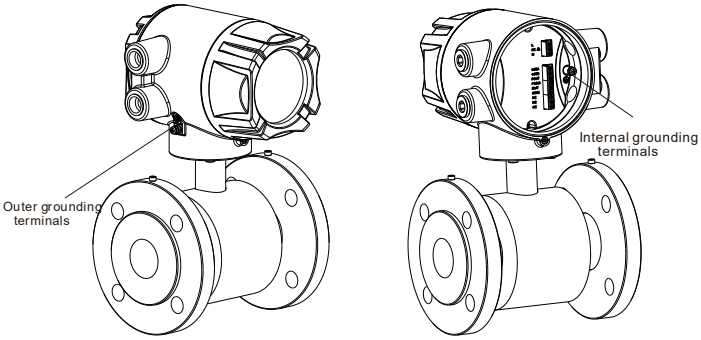

Fig.18 Converter grounding terminals

4.3 Wiring terminals

Screw-type terminal, cable cross-sectional area: 0.2 mm²–2.5 mm².

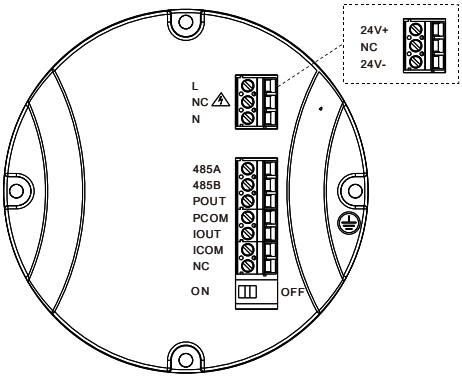

Fig.19 Terminal diagram for integrated type

Table 5 Terminal Description for integrated type

Terminal	Description
L, N	220V AC power supply
24V+, 24V-	24V DC power supply
485A, 485B	RS485 serial communication
IOUT, ICOM	(4~20)mA output
NC	Not Defined
ON/OFF	DIP switch for pulse output type. ON indicates active output; OFF indicates passive output.
POUT, PCOM	Pulse output
⏚	Converter instrument protection grounding

4.4 Power supply



Danger!

The equipment must be grounded in accordance with regulations so as to protect the operator from electrical shock.

(1) 220VAC power supply

Allowable range: 100VAC~230VAC，50Hz~60Hz

① L : AC live line

② N : AC neutral line

③ ⏚: Connect the ground wire to the ground screw

(2) 24VDC power supply

Allowable range: 20VDC~28VDC

① 24+: 24VDC Power supply positive pole

② 24-: 24VDCPower supply negative pole

③ ⏚ : Connect the ground wire to the ground screw.

4.5 Output termination



Warning!

The meter can only be installed, used, or operated by trained and authorized persons. This document will help you establish favorable operating conditions so as to make sure that you use the equipment in a safe and effective way.

4.5.1. Current output

① IOUT, ICOM: (4~20) mA output (IOUT is connected to the positive terminal of the current input, and ICOM is connected to the negative terminal of the current input).

② Active mode: load RL≤750Ω; Imax≤24.5mA.

③ The current corresponds to the percentage of flow.

4.5.2. Communication output

① 485A, 485B: RS485 communication output

② CCOM: RS485 communication ground

③ Protocol: ModBus-RTU

4.5.3. Pulse output

The corresponding terminals are POUT, PCOM (Remote type P+, P−).

Pulse output supports three output modes:

Output Mode 1: **OC gate passive output with pull-up resistor on user side**

Set the DIP switch inside the wiring cavity to OFF

POUT (P+) outputs the pulse signal

External power supply V+ can be 5V/12V/24V; Pull-up resistor R range: (2 ~ 10)kΩ

Pull-up resistor R range: (2 ~ 10)kΩ

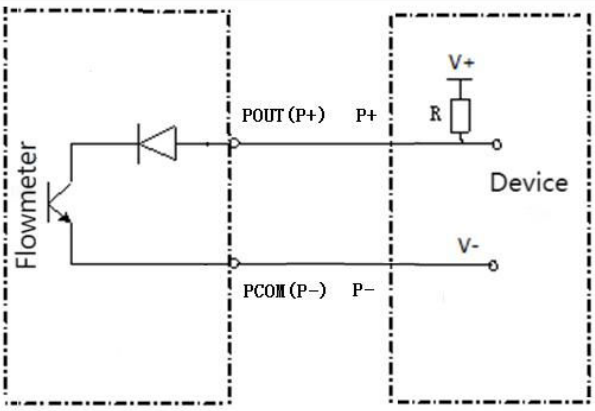

Fig.20

Output Mode 2: OC gate passive output with pull-down resistor on user side

Set the DIP switch inside the wiring cavity to OFF

PCOM (P−) outputs the frequency/pulse signal

POUT (P+) connects directly to the external power supply V+

This mode is commonly used in systems where flow meters are integrated with PLCs

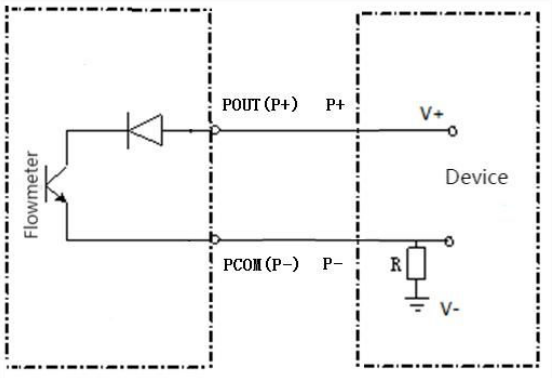

Fig.21

Output Mode 3: Active output using level signal, capable of directly driving loads

Set the DIP switch inside the wiring cavity to ON

POUT (P+) outputs frequency/pulse signals

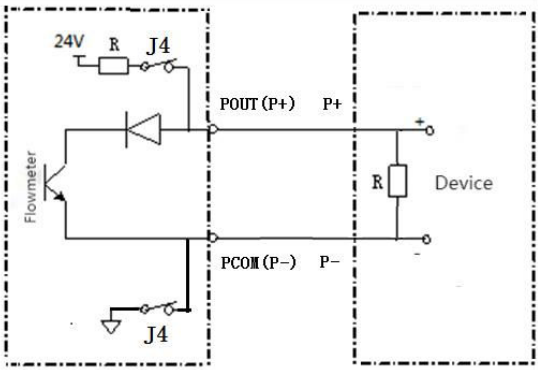

Fig.22

4.6 Post-Connection Check

Table 6 Post-connection Check

Inspection items	Result
Are the cables or instruments intact (visual inspection)?	□
Does the cable meet the requirements?	□
Is the cable completely free from external forces?	□
Is the terminal assignment correct?	□
Are all cable glands installed, securely tightened, and sealed?	□
After powering on, does the display show values?	□
Are all the housings installed and tightened?	□

5 Operation

5.1 Start up

5.1.1. Power on

Please check whether the installation is correct before powering on, including:

① The meter must be installed following safety compliance.

② Power supply connection must be performed in accordance with the regulations.

③ Please check that the electrical connection in the power supply is correct.

④ Tighten the converter shell back cover.

5.1.2. Converter start up

The measuring instrument consists of the measuring sensor and signal converter; the delivery can be put into service. All parameters and hardware are configured according to your order.

After energization, the instrument will perform a self-check once.

Then it will immediately begin to measure and display the current values.

5.2 Display and operating elements

The electromagnetic flowmeter display and operating unit (3 infrared touch keys) are located under the front cover of the converter display. The meter can be operated and set up without opening the cover, by pressing and holding the ▷ and ⏎ buttons simultaneously for 2 seconds to unlock them as instructed.

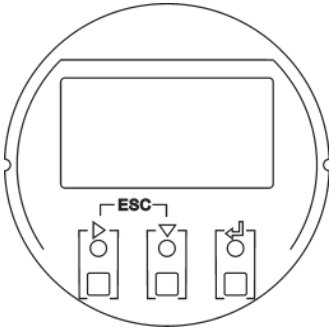

Fig.23 Display and operating elements

5.2.1. Display

Table 7

Display	Monochrome LCD display, 128*64 pixels
Functions	Multiple measurement value screens (measurement, status, alarm status, etc.)
Language	Chinese, English, Korean, Spanish, and Russian.
unit	Units can be selected via the configuration menu.

5.2.2. Operation Keys

The operating unit consists of three infrared touch keys, which are defined in the table below, where ▷ + ▽ is a combination of keys ESC .

Table 8 Operation keys

Mark	Name	Measuring mode	Menu mode	Modify mode
ESC (▷ + ▽)	Return	Check system alarm information	Return to the previous page	Return to the previous page
▷	Right	/	Switch menu	Switch data
▽	Down	Check cumulative amount and so on	Modify	Modify data
↵	Enter	Enter menu mode	Enter sub-menu	Confirm modification

5.3 Page description

5.3.1. Main page

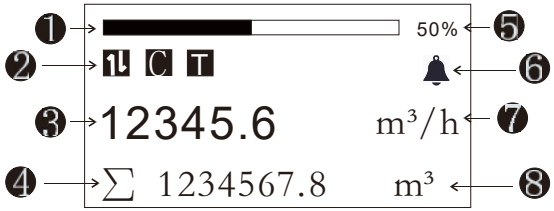

Fig.24 Main page

Table 9 Page description

No.	Description
1	Instantaneous flow in percent of flow
2	System status : Reverse flow : Low flow cutoff mode : Simulation mode
3	Instantaneous flow
4	Cumulative amount and so on Σ+:Positive flow accumulation Σ- : Negative flow accumulation Σ : Net flow accumulation **V** : Current velocity **MT**: Equivalent conductivity value
5	Instantaneous flow in percent of flow
6	System alarm information
7	Instantaneous flow unit
8	Accumulation flow unit

On the main page：

Press **[Down key]** to display of page of net flow accumulation, positive flow accumulation,

negative flow accumulation, and current velocity

System error:

When a system error occurs, a bell icon will flash in the upper right corner. At this

time, pressing the **[Return key]** enters the alarm page to check specific error information

5.3.2. Password verification page

On the main page, press the **[Enter key]** to enter the password verification page.



Fig.25 Password verification page

Quick configuration level password: **0000** (used to modify quick level parameters)

User configuration level password: **1000** (used to modify user level parameters.

5.3.3. Configuration page

Enter different user passwords to enter different configurations.

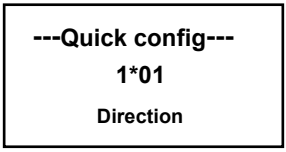

Fig.26 Configuration page

5.4 Quick configuration

Key parameters to facilitate the manufacturer and user in quickly setting up the meter:

Press **[Enter key]** to enter the parameter setting page.

Enter quick configuration level password: **0000**(Used to modify the quick setup menu).

Table 10 Quick configuration

NO.	Parameter	Setting mode	Parameter range	Default
1*01	Direction	Option	Forward / Reverse	Forward
1*02	Flow range	Figure	0.1*Maximum ~1.2*Maximum	Maximum
1*03	Flow unit	Option	(L; kg; m^3; t; ft^3; US gal; US bbl; UK gal; UK bbl)/	m^3/h

			(h; min; s)	
1*04	Cumulative reset	Option	Forward reset / Reverse reset	-
1*05	Mailing address	Figure	000~126	008
1*06	Language	Option	Chinese, English, Korean, Spanish, and Russian.	ENGLISH

5.5 Detailed configuration

The configuration identification style is "X * XX".

For example, the system setting category is 8 * XX, and the built-in language sub-configuration is 8 * 01. Select the corresponding number and confirm to select the corresponding sub-configuration.

Table 11 Detailed Configuration

NO.	Parameter	Setting mode	Password level	Parameter range	Default
1-Quick configuration					
1*01	Flow Direction	Option	Quick	Forward / Reverse	Forward
	Used to change the direction of flow, when the negative pole and positive pole signal cable are reversely connected, or the sensor is reversely installed, activate this function.				
1*02	Flow range	Figure	Quick	0.1*Maximum ~1.2*Maximum	Maximum
	Set the maximum flow limit value. Used to calculate the frequency, current output limit calculation, and alarm threshold calculation, etc.				
1*03	Flow unit	Option	Quick	(L; kg; m^3; t; ft^3; US gal; US bbl; UK gal; UK bbl)/ (h; min; s)	m^3/h
	When entering this menu configuration option, press ⊘ to select time				

NO.	Parameter	Setting mode	Password level	Parameter range	Default
	units/volume units. Choose volume unit ,such as L, m^3, gal; the density will not calculated; Choose a mass unit such as kg, t; need 1-2 density parameters.				
1*04	Accumulation reset	Option	Quick	Forward/Reverse reset	-
	Select the corresponding function, press **[Enter key]**, and the corresponding cumulative amount will be reset. Net cumulative value=positive cumulative value - negative cumulative value. Clearing the cumulative value in either direction will have an impact on the net cumulative value.				
1*05	Address	Figure	Quick	000~126	008
	Communication Protocol instrument address based on the RS-485 protocol Modbus RTU.				
1*06	Language	Option	Quick	Chinese, English, Korean, Spanish, and Russian.	ENGLISH
	Set system language				
2-Flow set					
2*01	Bidirectional measurement	Option	User	Open/Close	Open
	Allow measurement of flow from the reverse direction when opened; only measure forward flow when closed.				
2*02	Flow direction	Option	User	Forward / Reverse	Forward
	Same as 1*01.				
2*03	Flow unit	Option	User	(L; kg; m^3; t; ft^3; US gal; US bbl; UK gal; UK bbl)/(h; min; s)	m^3/h
	Same as 1*03.				

NO.	Parameter	Setting mode	Password level	Parameter range	Default
2*04	Fluid density	Figure	User	(0.01~5) g/cm^3	1
	Set fluid density				
2*05	Max. range	Read-only	User	--	--
	The maximum range that can be set; this configuration item is read-only.				
2*06	Flow range	Figure	User	0.1*Maximum ~1.2*Maximum	Maximum
	Same as 1*02.				
2*07	Flow resection	Figure	User	0~10%	1%
	Flow volume is regarded as zero if it is below the setting value. Zero means not removing.				
2*08	Damping time	Figure	User	0s~99s	--
	Damping coefficient of the filter, select the average selected within the time parameter as the real-time flow.				
2*09	Filter	Option	User	Open / Close	Close
	A digital filter is included in the converter specifically for pulsating or noisy flow signals. It smoothes the displayed indication value and current output. Turn on the filter, and the damping value setting can be reduced, and the response time of the converter is not affected. The "filtering" mode is selected using the up or down keys and turned on by pressing the **[Enter key]**				
2*11	Instantaneous correction	Read-only	User	--	--
	Correction of instantaneous flow.				
2*12	Accumulation unit	Read-only	User	L; kg; m^3; t; ft^3; US gal; US bbl; UK gal; UK bbl	--
	This unit is read-only and related to the pulse output unit.				
2*13	Accumulation	Option	User	Forward reset /	-

NO.	Parameter	Setting mode	Password level	Parameter range	Default
	reset			Reverse reset	
	Same as 1*04.				
2*14	Average	Option	User	No calculated / Calculated	No calculated
	When you need to calculate the average value, select "Calculated" and press ENT . After waiting for the calculation to complete, the calculated percentage average will be automatically displayed.				
3-Output set					
3*01	Pulse output type	Option	User	High/Low power level	Low power level
	Choose active output or passive output.				
3*02	Pulse coefficient	Figure	User	0.001~9999.9	--
	The default value of 10. It is also influenced by the highest frequency, so that the frequency corresponding to the range does not exceed 5kHz. Settings that exceed the range will be restricted within the range.				
3*03	Pulse width	Figure	User	0.1~2000ms	--
	The maximum pulse width is also limited by a proportion not exceeding 50%.				
3*04	Pulse unit	Option	User	L; kg; m^3; t; ft^3; US gal; US bbl; UK gal; UK bbl	m^3
	This unit will also affect the cumulative unit.				
3*05	Address	Figure	User	000~126	008
	Same 1*05.				
3*06	Baud rate	Option	User	4800/9600/19200/ 38400/57600/ 115200	9600
	Baud rate of serial communication.				
3*07	Even-odd check	Option	User	None / Even check	None

NO.	Parameter	Setting mode	Password level	Parameter range	Default
				/ Odd check	
	Verification mode of serial communication.				
3*08	Endianness	Option	User	2143、4321、1234、3412	2143
	Byte exchange sequence of serial communication				
3*09	Output current	Figure	User	3.6mA~22.8mA	0mA
	Converter fixed current output for calibrating (4-20) mA output, 0mA means normal output.				
3*11	4mA calibration	Figure	User	3.6mA~4.4mA	
	4mA calibration current value, the written value is the measured value when the output current is 4mA.				
3*12	20mA calibration	Figure	User	18mA~22.8mA	
	20mA calibration current value, the written value is the measured value when the output current is 20mA.				
4-Limit & Error					
4*01	Alarm permission	Option	User	Open / Close	Close
	Open or close alarm function allows.				
4*02	Max. alarm value	Figure	User	0%~120%	120%
	Set the max alarm value, range percentage.				
4*03	Min. alarm value	Figure	User	0%~120%	0%
	Set the min alarm value and, range percentage.				
4*04	Hysteresis	Figure	User	0%~5%	0.5%
	Used to eliminate the alarm disturbance Upper limit elimination conditions: real-time flow is less than the upper limit alarm value minus the return difference. Lower limit elimination conditions: real-time flow is greater than the lower limit alarm value plus return difference.				
4*05	Error current	Option	User	4mA / High / Low	4mA

NO.	Parameter	Setting mode	Password level	Parameter range	Default
	selection				
	When the system malfunctions, select the 4mA, high, and low current output				
4*06	High error current value	Figure	User	23.5mA~24.5mA	24mA
	When the system malfunctions, the output current high value.				
4*07	Low error current value	Figure	User	3.2mA~3.9mA	3.8mA
	When the system malfunctions, the output current low value.				
5-Empty pipe					
5*01	Empty pipe alarm switch	Option	User	Open / Close	Open
	Set whether to enable the empty detection function.				
5*02	Empty pipe alarm threshold	Figure	User	0~16000	--
	Threshold for empty pipe alarm judgment.				
5*03	Conductivity equivalent	Read-only	User	--	--
	This item is the conversion value of the internal reading code value of the system, not the actual conductivity value, and only serves as a reference for judging conductivity (or judging empty or full pipes).				
6-Sensor Setting					
6*01	Sensor zero point	Read-only	User	--	--
	Sensor factory zero point, read-only.				
6*02	Sensor coefficient	Read-only	User	0.5~10	--
	Sensor coefficient.				
6*03	Diameter	Option	User	0~35	--

NO.	Parameter	Setting mode	Password level	Parameter range	Default
				(Diameter code)	
	Diameter of sensor.				
6*04	Zero adjustment	Figure	User	-100~100	--
	Zero adjustment of the sensor.				
7-Test Mode					
7*01	Simulation mode	Option	User	Not simulated / Percentage	Not simulated
	This setting disappears after a power failure, and this function simulates a normal state, which is the function used during testing.				
7*02	Simulation values	Figure	User	--	--
	This setting is effective after turning on simulation mode and disappears after power failure.				
8-System					
8*01	Language	Option	User	Chinese, English, Korean, Spanish, and Russian.	ENGLISH
	Same as 1*06.				
8*02	Version	Read-only	User	--	--
	Software version information.				
8*03	Tag No.	Option	User	26 English letters	TAG
	Tag setting, up to 8 letters can be set				
8*04	Restore factory parameters	Option	User	Yes / No	No
	Restore factory parameter settings.				
8*05	LCD contrast	Option	User	1~9	5
	Display contrast settings				
HART Setting (optional)					
9*01	Polling	Select	User	00~63	00

NO.	Parameter	Setting mode	Password level	Parameter range	Default
	Address				
	Sets the polling address.				
9*02	Loop Current	Select	User	ON/OFF	On
	Sets the loop current mode. When turned off, the output is fixed at 4 mA.				
9*03	Tag No.	Select	User	26 English letters	TAG
	Sets the tag. Up to 8 characters can be entered.				

5.6 Operating instruction

5.6.1. Parameter selection and adjustment

On the main page, press **[Enter key]**, press passwords to enter different configurations.

After entering the corresponding configuration page, the position indicated by the cursor is the menu level (element). Press **[Right key]** to move the cursor, press **[Down key]** to add data, and press **[Enter key]** to confirm selection and save.

Press **[Return key]** to return to the previous menu corresponding to the permission.

After modifying the password, you can directly enter the monitoring main interface.

To re-enter the configuration, you need to enter the permission password again.

For example, if you need to modify the flow range, the specific menu operation is as follows:

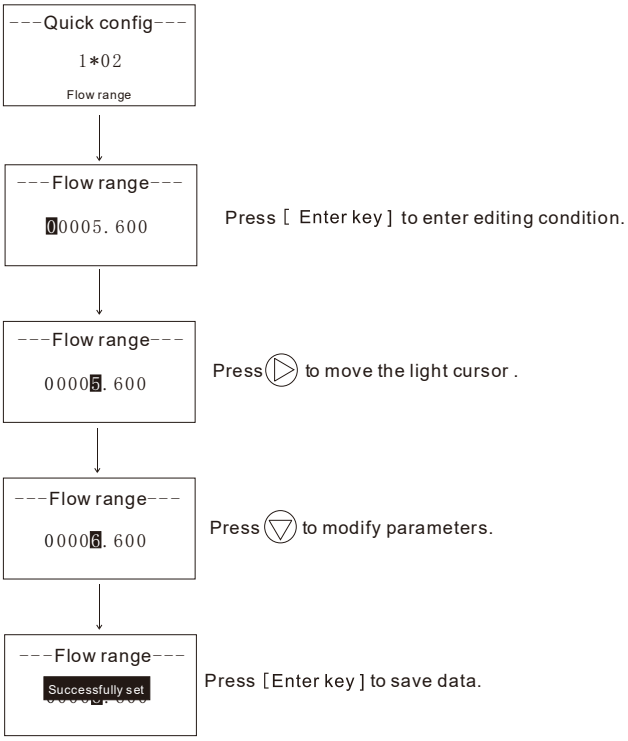

Fig.27 Example of operation

5.6.2. Display measurement

This page will display after startup.

Σ+:Positive flow accumulation Σ- : Negative flow accumulation

Σ : Net flow accumulation V : Current velocity

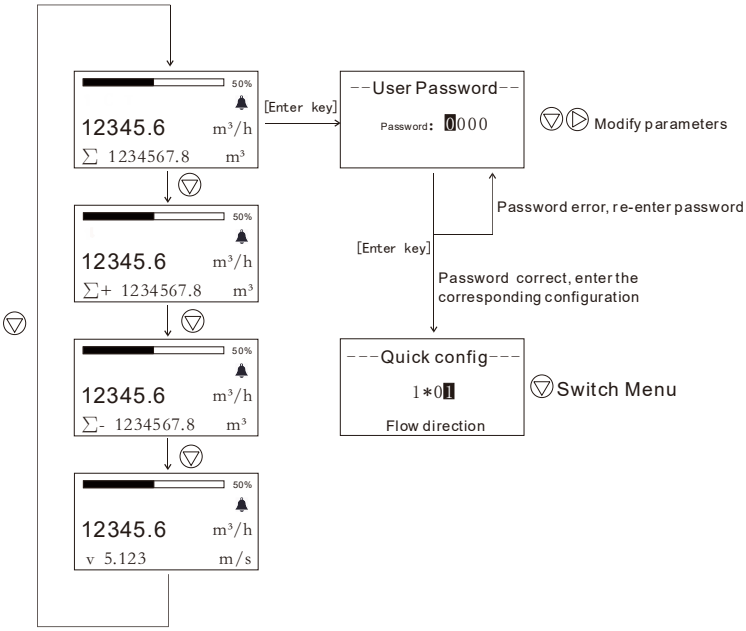

Fig.28 Display measurement

5.6.3. Flow setting

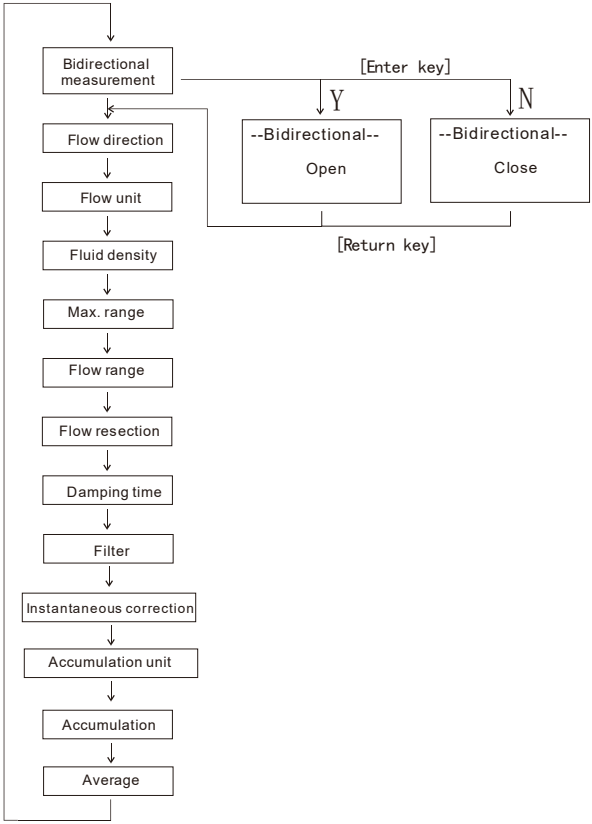

Fig.29 Flow setting

5.6.4. Output, limit & error setting

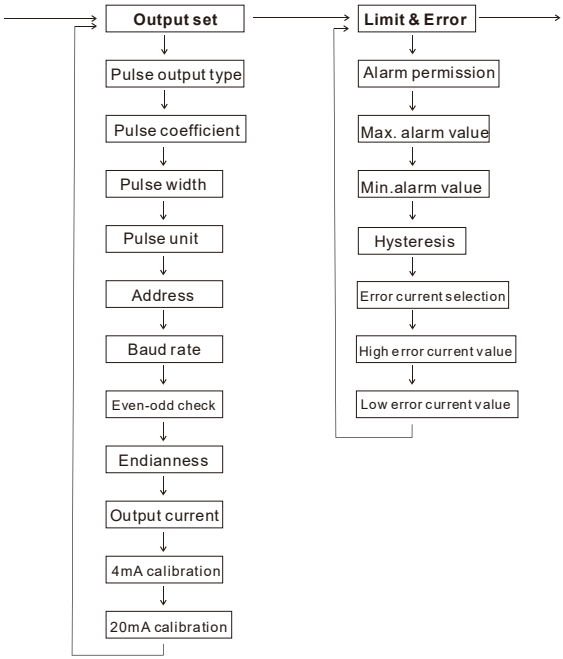

Fig.30 Output ,limit & error setting

5.6.5. Empty pipe function, sensor function, test mode, system setting

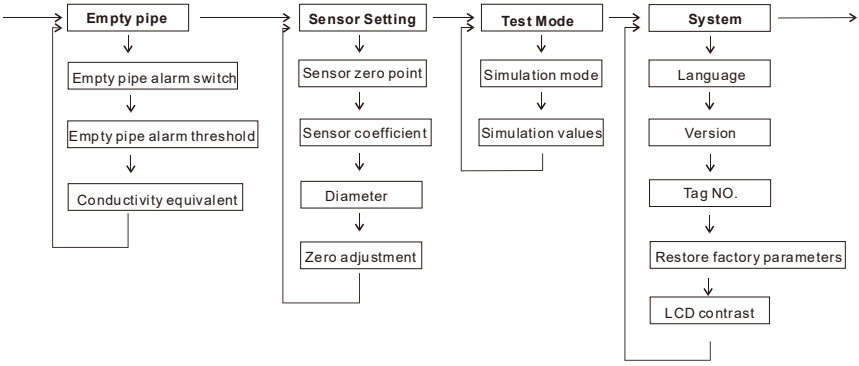

Fig.31 Empty pipe function, sensor function, test mode, system setting

6 Functions

6.1 System information

The flowmeter itself has a self-diagnosis function, in addition to the power supply and circuit board hardware failures; it can correctly provide the corresponding alarm message to the fault in a general application.

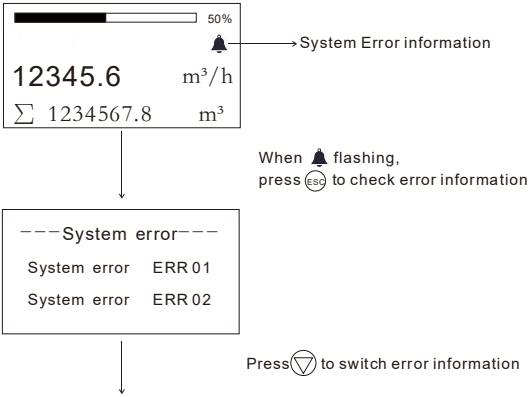

Fig.32 System information

Table 12 System information

Display	Alarm content
🔔	In the main page, press **[Return key]** to check error information.
ERR01~04	System error.
ADC erro	Signal acquisition chip malfunction
Excitation current error	Excitation current output by the converter is incorrect. Check if the excitation wiring is disconnected
Signal saturation	The signal exceeds the collection range.
Signal fluctuation exceeds	The sensor signal is unstable, greater than the AD sampling of the upper limit
Empty pipe alarm	The pipeline is not fully filled with the liquid to be tested or the sensor is not grounded properly

Display	Alarm content
Min. flow value alarm	Detected traffic exceeds the set lower limit alarm value.
Max. flow value alarm	Detected traffic exceeding the set upper limit alarm value
Flow exceeds the range	The current real-time flow rate exceeds the set flow limit
Output freq saturation	The output frequency exceeds the collection range.
Units mismatch exceeds	Unit setting error
	Reverse flow detected (not configured properly)
	Low flow cutoff mode
	Simulation mode

6.2 Pulse/Current output

6.2.1. Pulse output

It is mainly used for sensor manufacturer coefficient calibration and user measurement. In the third way configuration parameter settings:

The pulse coefficient corresponds to the number of pulses in a measured flow unit. If the pulse coefficient value changes, the cumulative value is maintained in the selected unit. The setting range of the pulse coefficient is from 0.001 to 100000 pulses per unit. Use the selected flow range, pulse width (0.1ms to 1000ms), and pulse units (such as L, m^3). Check the pulse coefficient of the passive input with a mass unit (such as g, kg) and a density correction coefficient. If any of these parameters change, the pulse width cannot exceed 50% of the output frequency cycle when the flow rate is at 100% (duty cycle 1:1). If the input pulse width is large, it will be automatically reduced to 50% of the cycle. Pulse output can only be achieved using counter instruments, not frequency meters.

6.2.2. Current Output

Mainly used for transmitting output to other intelligent instruments, such as: digital display table, recorder, PLC, DCS, etc.

The current output type: 4 - 20mA.

The current valve corresponds to real-time flow rate, 20mA corresponds to range limit, 4 mA corresponds to range limit.

Conversion relationship

$$I_{Real\ time} = \frac{Q_{Real\ time}}{Q_{max}} 16.00 + 4.00$$

Notice:

$Q_{real\ time}$ Indicate real-time flow rate

Q_{Max} Indicate current instrument range

$I_{real\ time}$ Indicate real-time current value

6.3 Communication

This instrument provides a standard RS485 communication interface, using the international standard MODBUS-RTU.

6.3.1. ModBus protocol command encoding definition

The MODBUS function code definition is shown in the table below, and the electromagnetic flowmeter adopts the 04 function code.

Table 13 Function code

Function code	Name	Definition
01	Using coil read and write commands	Reserve
02	Using discrete input commands	Reserve
03	Using the Hold Register read command	Reserve
04	Using the Input Register read Command	Read dynamic variables
06	Using a single holding register write command	Reserve
16	Using multiple holding registers write command	Reserve

6.3.2. Register address

Table 14 Register address (Function code 04)

Register number	Address	Parameter	Data type	Access Type	Range
3：0100	0x0063	Instantaneous flow	Float	R	
3：0102	0x0065	Instantaneous flow velocity	Float	R	
3：0104	0x0067	Flow percentage	Float	R	
3：0106	0x0069	Conductivity	Float	R	
3：0108	0x006B	Forward flow accumulation of an integer	uint32	R	
3：0110	0x006D	Forward flow accumulation of decimal	uint32	R	The decimal part magnifies by 100 times, 123 stands for 0.123
3：0112	0x006F	Reverse flow accumulation of integer	uint32	R	
3：0114	0x0071	Reverse flow accumulation of decimal	uint32	R	The decimal part magnifies by 100 times, 123 stands for 0.123
…	…	Reserve	/	/	Reserve，do not operate
3：1001	0x03E8	Instantaneous flow	Float	R	0~Maximum
3：1003	0x03EA	Forward flow accumulation	Double	R	0~99999999
3：1007	0x03EE	Reverse flow	Double	R	0~99999999

Register number	Address	Parameter	Data type	Access Type	Range
		accumulation			
3：1011	0x03F2	Flow percentage	Float	R	0~120
3：1013	0x03F4	Instantaneous flow velocity	Float	R	0~6

6.3.3. Communication configuration

Mailing address: 0~126

Default address: 8

Baud rate: 4800; 9600; 19200; 38400; 57600;115200;

The default baud rate: 9600

Check: no check, odd parity, parity; Default no check;

For 32-bit data (long plastic or floating point) arranged in the communication frame;

Example: Long integer 16909060(01020304H): 03 04 01 02

Floating number 4.00(40800000H): 00 00 40 80

Double 10.24(40247AE147AE147B)：14 7B 47 AE 7A E1 40 24

6.3.4. Communication examples

Read instantaneous flow:

Send message：08 04 03 E8 00 02 F1 22

Send message：08 04 04 22 6E 41 3F 79 61(Instantaneous flow：11.95)

Read forward flow accumulation (Double)：

Send message：08 04 03 EA 00 04 D0 E0

Send message：08 04 08 70 A4 0A 3D 53 D7 40 58 14 56 (Forward flow accumulation：97.31)

Read reverse flow accumulation:

Send message: 08 04 00 6F 00 04 C1 4D

Return message: 08 04 08 00 D2 00 00 03 66 00 00 18 C7 (Reverse flow accumulation：210.87(integer + (decimal/1000)).

The integer part (210)：00 D2 00 00;

The decimal part (870)：03 66 00 00)

7 Precautions for explosion-proof



NOTE !

- This product is an explosion-proof instrument with strict requirements in terms of instrument structure, installation location, external accessories, maintenance, etc. Please handle it carefully as violating these regulations may cause dangerous situations.
- Before operating the instrument, please read this chapter carefully.
- For explosion-proof instruments, the description in this chapter takes precedence over other instructions in the manual.

This product complies with the provisions of GB/T 3836.1-2021 *Explosive atmospheres-Part: Equipment-General requirements* and GB/T 3836.2-2021 *Explosive atmospheres -Part 2: Equipment protection by flameproof enclosures "d"*

Precautions for use:

(1) Non-professionals are not allowed to install or disassemble at will, and the internal and external grounding must be reliable.

(2) Products that have passed inspection are not allowed to replace components or change structure at will, in order to avoid affecting explosion-proof performance.

(3) During maintenance, pay attention to protecting the explosion-proof surface, and all explosion-proof surfaces must not be damaged or corroded.

(4) If the sealing ring and fasteners are damaged, they should be replaced in a timely manner.

(5) It is strictly prohibited to open the cover with electricity. Explosion-proof instruments must be powered off for 20 minutes before wiring, and cable specifications must meet explosion-proof performance requirements.

(6) After replacing the internal components, restore the sealing ring to its original position and tighten the gauge cover.

8 Common troubleshooting

Table 15

Phenomenon	Cause	Method
Converter flow is negative	The sensor direction indicator rod is opposite to the fluid flow direction	Rotate the sensor direction 180°
	There is a reverse connection between SIG1 and SIG2 or EXT1 and EXT- in the sensor junction box	Converter rewired
Converter output over range	The flowmeter range value is less than the actual measurement value	Expand the flowmeter range
	Fluid does not fill the pipe	Close the small flow control valve
	Exciter coil open circuit	Rewire
The output signal fluctuates too much	There is gas at the sensor electrode, resulting in poor contact between the electrode and the medium	Exclude the gas in the pipeline
	Deposits on the electrodes	Cleaning electrode
The output signal gradually drifts towards zero	The sensor enters the water	Replace the sensor
	Electrodes are covered	cleaning electrode

Appendix 1 Electrode selection and specification

Table 16 Corrosion Resistance of Electrode Material (Only for Reference)

Material	Corrosion Resistance
Molybdenum-containing stainless steel (316L)	Applicable: domestic water, industrial water, sewage, weak acid-base salt solutions, normal temperature concentrated nitric acid. Not applicable: hydrofluoric acid, hydrochloric acid, chlorine, bromine, iodine and other media.
Hastelloy B	Applicable: non-oxidizing acids, such as hydrochloric acid and hydrofluoric acid of certain concentration, alkaline solutions with a concentration of no less than 70% sodium hydroxide. Not applicable: nitric acid and other oxidizing acids.
Hastelloy C	Applicable: oxidizing acids, such as nitric acid, mixed acid, or sulfuric acid mixed corrosive media, corrosive environments with oxidizing salts or other oxidizing agents such as hypochlorite solution above room temperature, seawater. Not applicable: reducing acids such as hydrochloric acid and chlorides.
Ti	Applicable: chloride, hypochlorite, seawater, oxidizing acid. Not applicable: reducing acids such as hydrochloric acid, sulfuric acid, etc.
Ta	Applicable: most acids, such as concentrated hydrochloric acid, nitric acid and sulfuric acid, including hydrochloric acid with a boiling point, nitric acid and sulfuric acid below 175℃. Not applicable: alkalis, hydrofluoric acid, sulfur trioxide.
Pt	Applicable: various acids (excluding aqua regia), alkalis and salts.

Notes: Due to a wide variety of media, their corrosive substance is affected by complex factors such as temperature, concentration, and velocity.

So this table is only for reference. Users may make their own choices based on the actual situation. You may refer to the corrosion prevention manual for general media. But for media with complex compositions like mixed acid, you may need to conduct corrosion tests for materials to be selected.

Appendix 2: Flow and velocity parallel table

Table 17 Flow and Velocity Parallel Table for Electromagnetic Flowmeter

Velocity (m/s) / Flow (m³/h) / DN (mm)	0.1	0.2	0.4	0.5	1	5	10
DN15	0.0636	0.127	0.254	0.318	0.636	3.1809	6.362
DN20	0.113	0.226	0.452	0.565	1.131	5.6549	11.310
DN25	0.176	0.353	0.707	0.884	1.767	8.8357	17.671
DN32	0.290	0.579	1.158	1.448	2.895	14.476	28.953
DN40	0.452	0.905	1.810	2.262	4.524	22.619	45.239
DN50	0.707	1.414	2.827	3.534	7.069	35.343	70.690
DN65	1.195	2.389	4.778	5.973	11.946	59.730	119.46
DN80	1.810	3.619	7.238	9.048	18.100	90.478	181.00
DN100	2.827	5.655	11.310	14.137	28.274	141.37	282.74
DN125	4.418	8.836	17.671	22.090	44.179	220.89	441.79
DN150	6.362	12.723	25.447	31.809	63.617	318.09	636.17
DN200	11.310	22.619	45.239	56.549	113.10	565.49	1131.0
DN250	17.671	35.343	70.686	88.357	176.71	883.57	1767.1
DN300	25.447	50.893	101.79	127.23	254.47	1272.3	2544.7