

Datasheet

Electromagnetic Flowmeter

SUP-A100D

Supmea®

Committed to process automation solutions

E-mail: info@supmea.com

www.supmea.com

Datasheet

Electromagnetic Flowmeter
SUP-A100D

The electromagnetic flowmeter is designed based on the Faraday electromagnetic induction principle and used to measure the instantaneous flow rate of conductive liquids in enclosed pipelines in flammable and explosive environments. During on-site monitoring and display, standard current signals, pulse signals, and RS485 digital signals can be output for recording, adjustment, and control, achieving automatic detection and control. It can be widely used in industries such as tap water, chemical industry, coal, environmental protection, light textile, metallurgy, papermaking, etc.

Applications

- Tap water
- Chemical industry
- Coal
- Environmental protection
- Light textile
- Metallurgy
- Paper-making



Electromagnetic Flowmeter

Features

- Certified to multiple universal explosion-proof (Ex) standard.
- Delivers reliable measurements with high accuracy and excellent stability.
- Integrated design with no moving parts; easy to install and maintenance-free.
- Equipped with an RS485 communication interface supporting the standard Modbus RTU protocol.
- Measures flow accurately in both directions, unaffected by fluid flow direction.
- Adopting advanced low-frequency square-wave excitation for stable zero-point performance, strong anti-interference capability, and reliable operation.
- Touch-sensitive buttons enable lid-free operation.
- Adjustable display orientation for easy reading.
- Built in bilingual (Chinese/English) interface allows seamless language switching.

Principle

The operating principle of electromagnetic flowmeter is based on Faraday's law of electromagnetic induction. The two electromagnetic coils at the upper and lower ends as shown in Figure 3 generate a constant or alternating magnetic field. When the conductive medium flows through the electromagnetic flowmeter, the induced electromotive force can be detected between the left and right electrodes on the wall of the flowmeter tube. The magnitude of the induced electromotive force is proportional to the electrically conductive medium flow rate, the magnetic induction density of the magnetic field, and the width of the conductor (the inner diameter of the flowmeter measuring tube), and the flow rate of the medium can be obtained by calculation. The induced electromotive force equation is as follows:

$$E=K\times B\times V\times D$$

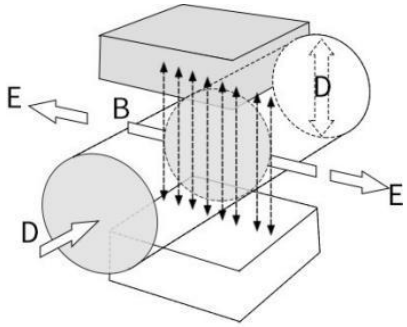

When measuring the flow, the fluid flows through a magnetic field which is perpendicular to the flow direction. The flow of conductive fluid induces a potential proportional to the average flow velocity, thus requiring the conductivity of the measured flowing liquid to be higher than the minimum conductivity.The induced voltage signal is detected by two electrodes and transmitted to the converter via a cable. After a series of analog and digital signal processing, the accumulated flow and real-time flow are displayed on the display of the converter.

Parameters			
	Input		
Measured variable	Direct measured variables: Flow velocity Calculated measured variables: Volume flow , mass flow.		
Velocity of flow	Typically Velocity of flow: 0.5m/s~5m/s		
Nominal diameter	DN15~DN300		
Flow range	Nominal diameter	Min value (m^3/h)	Max value (m^3/h)
	DN15	0.32	3.2
	DN20	0.56	5.6
	DN25	0.88	8.8
	DN32	1.4	14
	DN40	2.3	23
	DN50	3.5	35
	DN65	6	60
	DN80	9	90
	DN100	14	140
	DN125	22	220

	DN150	32	320
	DN200	56	560
	DN250	88	880
	DN300	127	1270
Range ratio	1: 10		
	Output		
Current output	Function	Measurement of volume and quality (in the case of constant density)	
	Setting	Scope	(4~20)mA
		Max	20mA
		Min	4mA
	Internal voltage	24VDC	
	Load	≤750Ω	
Pulse output	Function	Set up Pulse output	
	Pulse output	Basis	F_{max} ≤ 5000 cp/s Output pulse width: 0.1ms ~2000ms (This value is lower than the maximum duty cycle, with a maximum duty cycle of 1:1 F_{max} ≤ 5000 cp/s
		Pulse coefficient	0.001~100000/unit
	Passive	$U_{Internal}$ ≤ 24VDC	
	Active	$U_{Internal}$ ≤ 24VDC I≤ 4.52mA	
Communications	RS485 serial , MODBUS-RTU communication protocol		
	Power supply		
Supply voltage	100VAC~230VAC，50/60Hz； 20VDC~28VDC		
Power consumption	≤15W		
Terminals	Screw type terminal block, maximum wire diameter 2.5mm^2		
Cable entries	M20*1.5 or NPT1/2		
Supply voltage	100VAC~230VAC, 50/60Hz; 20VDC~28VDC		
	Performance characteristics		
Reference operating conditions	Medium: water Temperature: 20℃ Pressure: 0.1MPa Installation requirements: Inlet run≥10DN, Outlet run≥5DN		
Accuracy	Measurement value±0.5%(Flow velocity 0.5m/s~5m/s)		
Repetitiveness	0.16%		

Maximum measured error	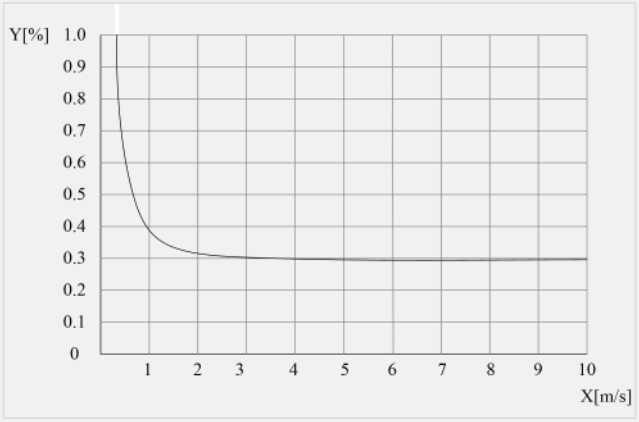 ①X[m/s]: Velocity of flow ②Y[%]: Actual measured value deviation
Process	
Medium temperature range	Polyurethane rubber (PU): -10℃~60℃ Chloroprene rubber (CR): -10℃~70℃ PTFE/F46: -10℃~120℃
Pressure rating (High pressure can be customized)	DN15~DN250: PN<1.6MPa DN300: PN<1.0MPa Note: (If there are differences in the selection of individual specifications, the label shall prevail, and high-pressure can be customized)
Conductivity	≥50μS/cm
Environment	
Ambient temperature	-10℃~55℃
Storage temperature	-20℃~55℃
Protection level	IP65
Explosion-proof parameters	
Ex symbol	Ex db ib IIC T6...T4 Gb Note: The product is a flameproof intrinsic safety composite explosion-proof type. The product header is designed with explosion-proof structure, the sensor measuring electrode part is designed with intrinsic safety, and the intrinsic safety circuit is an internal circuit with no external output.
Temp group	Lining material / Medium temperature [℃] T6[85℃] / T5[100℃] / T4[135℃] PU: -10~60 / -10~60 / -10~60 CR: -10~60 / -10~70 / -10~70 PTFE、F46: -10~60 / -10~75 / -10~120
Cable introduction Installation Requirements	Note: During the installation and use of the product, corresponding measures should be taken to ensure that the temperature at the neck of the sensor does not exceed 75℃
Cable introduction Installation Requirements	During product installation and use, it is necessary to select or prepare cable entry devices that comply with the requirements of GB/T 3836.1-2021 and GB/T 3836.2-2021 standards and bear the explosion-proof marking Ex db IIC Gb.

Wiring

Terminal	Description
L, N	100VAC~230VAC, 50/60Hz;
24V+; 24V-	20VDC~28VDC
485A，485B	RS485 serial communication
IOUT, ICOM	(4~20)mA output
POUT, PCOM	Pulse output
⏚	Protection grounding for converter

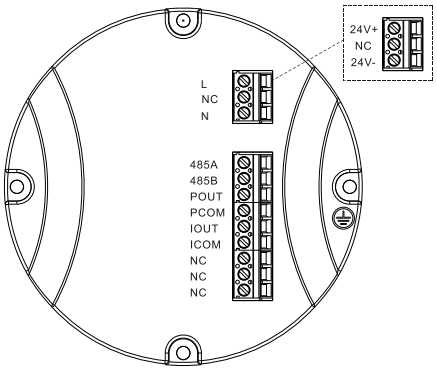

Dimension

Sensor Dimensions

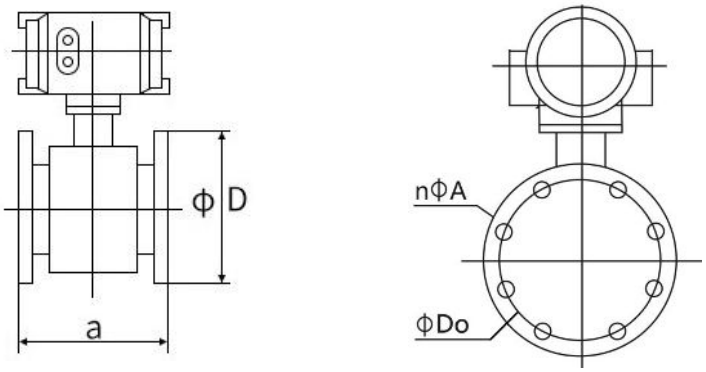

Fig.1 Sensor appearance diagram

Table 1 Sensor dimensions (HG/T 20592 flange)

DN	a	D	Do	n*A	Pressure resistance
15	200	95	65	4*14	1.6MPa
20	200	105	75	4*14	1.6MPa
25	200	115	85	4*14	1.6MPa
32	200	140	100	4*18	1.6MPa
40	200	150	110	4*18	1.6MPa
50	200	165	125	4*18	1.6MPa
65	200	185	145	4*18	1.6MPa
80	200	200	160	8*18	1.6MPa
100	250	220	180	8*18	1.6MPa
125	250	250	210	8*18	1.6MPa
150	300	285	240	8*22	1.6MPa
200	350	340	295	12*22	1.6MPa
250	450	405	355	12*26	1.6MPa
300	500	445	400	12*22	1.0MPa

Table 2 Sensor dimensions (JB/T 81 flange)

DN	a	D	Do	n*A	Pressure resistance
10	200	90	60	4*14	1.6MPa
15	200	95	65	4*14	1.6MPa
20	200	105	75	4*14	1.6MPa
25	200	115	85	4*14	1.6MPa
32	200	135	100	4*18	1.6MPa
40	200	145	110	4*18	1.6MPa
50	200	160	125	4*18	1.6MPa
65	200	180	145	4*18	1.6MPa
80	200	195	160	8*18	1.6MPa
100	250	215	180	8*18	1.6MPa
125	250	245	210	8*18	1.6MPa
150	300	280	240	8*23	1.6MPa
200	350	335	295	12*23	1.6MPa
250	450	405	355	12*25	1.6MPa
300	500	440	400	12*23	1.0MPa

Table 3 Sensor dimensions (GB/T 9124 flange)

DN	a	D	Do	n*A	Pressure resistance
10	200	90	60	4*14	1.6MPa
15	200	95	65	4*14	1.6MPa
20	200	105	75	4*16	1.6MPa
25	200	115	85	4*16	1.6MPa
32	200	140	100	4*18	1.6MPa
40	200	150	110	4*18	1.6MPa
50	200	165	125	4*20	1.6MPa
65	200	185	145	8*20	1.6MPa
80	200	200	160	8*20	1.6MPa
100	250	220	180	8*22	1.6MPa
125	250	250	210	8*22	1.6MPa
150	300	285	240	8*24	1.6MPa
200	350	340	295	12*26	1.6MPa
250	450	405	355	12*29	1.6MPa
300	500	445	400	12*26	1.0MPa

Converter Dimensions

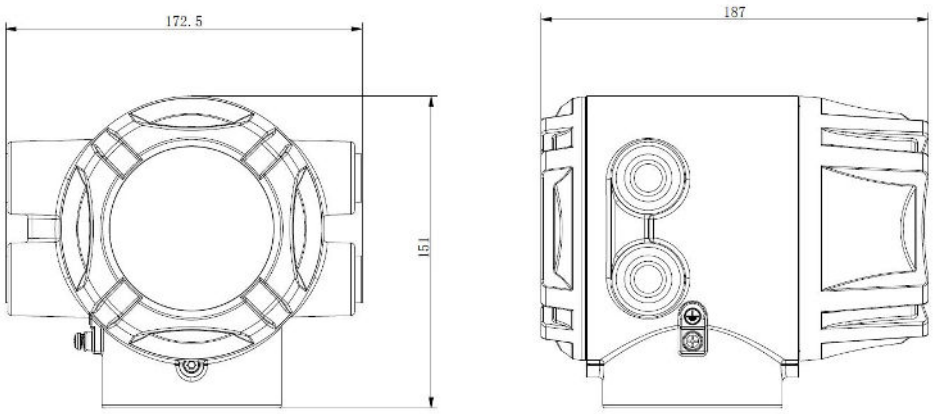

Fig.2 Converter dimensions (Unit: mm)

Ordering code

SUP-A100D-15-20-25-32-40-50-65-80-1C-1E-1G-2C-2G-3C-J-H-XX-B-C-XX-K-AA-AM-M3-MF-MG-T1-T2-MH-N6-N1-N2-N7-WA-W7-PB-PC-PE-PR-PU-PT													Description
SUP-FMX470	-	-	-	-	-	-	-	-	-	-	-	-	
Nominal diameter	15												DN15(1/2")
	20												DN20(3/4")
	25												DN25(1")
	32												DN32(1.25")
	40												DN40(1.5")
	50												DN50(2")
	65												DN65(2.5")
	80												DN80(3")
	1C												DN100(4")
	1E												DN125(5")
	1G												DN150(6")
	2C												DN200(8")
	2G												DN250(10")
	3C												DN300(12")
Process connection		J											JB/T 81 Flange
		H											HG/T 20592 Flange
		XX										Other	
Nominal pressure			B										PN10
			C										PN16
			XX										Other
Process connection material and body material				MC									Carbon Steel CS
				M1									304SS
				XX									Other
Accuracy					K								Level 0.5
Output and power supply						AA							4-20mA+pulse+RS485, 220VAC
						AM							4-20mA+pulse+RS485, 24VDC
Electrode Materials							M3						316LSS
							MF						Hastelloy B
							MG						Hastelloy C
							T1						Titanium (Ti)
							T2						Tantalum (Ta)
							MH						Pt-Ir

Lining material	N6				PTFE
	N1				Neoprene CR
	N2				Polyurethane PU
	N7				FEP (F46)
Electrical interface, housing material and protection level	WA				Integrated version, M20×1.5 cable gland, aluminum alloy, IP65
	W7				Integrated version, NPT1/2 cable gland, aluminum alloy, IP65
Additional options					
Accessories	PB				Paired flange carbon steel CS
	PC				Paired flange 304SS
	PE				Paired grounding ring 316LSS
	PR				M20×1.5 explosion-proof connector
	PU				NPT1/2 explosion-proof connector
	PT				Tag Nameplate 304SS